Cabinet Unit Heater Options Booklet

C US

MESTEK, INC.

MADE IN THE USA

Cabinet Unit Heater Options

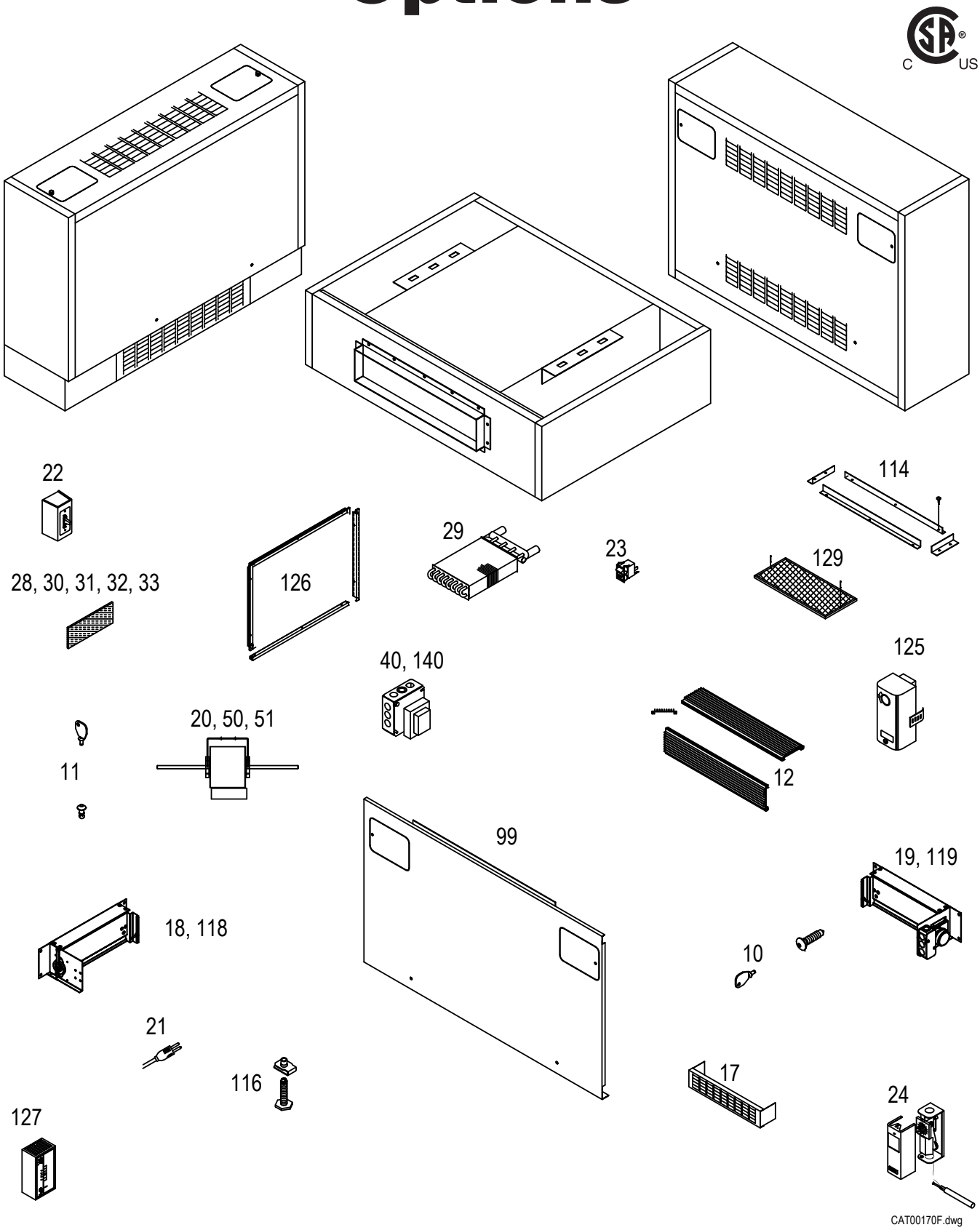

TABLE OF CONTENTS

OPTION NUMBER		PAGE NUMBER
	LABEL PLACEMENT INFORMATION	4
Factory Installed		
10	LIMITED ACCESS FASTENERS - FRONT PANEL	5
11	LIMITED ACCESS FASTERERS - ACCESS DOORS	6
12	EXTRUDED ALUMINIUM GRILLE - INLET / OUTLET	7
13	DECORATOR COLOR	8
17	LOUVERED INLET GRILLE - FLOOR UNITS	9
18	25% MANUAL OUTSIDE AIR DAMPER	10
19	25% MOTORIZED OUTSIDE AIR DAMPER	11
20	HIGH STATIC MOTOR	12
21	PLUG-IN MOTOR	13
22	MOTOR STARTER	14
23	SERVICE SWITCH - DPST	15
24	RETURN AIR TEMPERATURE CONTROL	16
26	RIGHT HAND COIL CONNECTION	17
27	SPECIAL COLOR	18
28	INSULATED EXTERNAL CABINET	19
29	HIGH CAPACITY TWO ROW COIL	20
30	FOIL FACED INSULATION - FRONT PANEL	21
31	FOIL FACED INSULATION - EXTERNAL CABINET	22
32	CLOSED CELL INSULATION - FRONT PANEL	23
33	CLOSED CELL INSULATION - EXTERNAL CABINET	24
40	24 VAC 40VA TRANSFORMER	25
50	ECM MOTOR PACKAGE	26
51	HIGH STATIC ECM MOTOR PACKAGE	27
99	14-GAUGE FRONT PANEL	28
Field Installed		
113	TOUCH UP PAINT - SEE PRICE SHEET	
114	DUCT COLLAR KITS	29
116	LEVELING LEGS FOR FLOOR UNITS	30
118	25% MANUAL OUTSIDE AIR DAMPER	31
119	25% MOTORIZED OUTSIDE AIR DAMPER	32
125	AQUASTAT CONTROLLED FAN, FROM RETURN WATER	33
126A	WALL SEAL KITS - FLOOR UNITS	34
126B	WALL SEAL KITS - WALL & CEILING UNITS	35
	WALL SEAL KITS - INSTRUCTIONS	36
127	LINE VOLTAGE ROOM (WALL) THERMOSTAT	37
129	EXTRA FILTER	38
140	24VAC 40VA TRANSFORMER	39
	WIRING DIAGRAM - STANDARD 115 VOLT	40

MODELS, ARRANGEMENTS AND SIZES ARE DESIGNATED AS FOLLOWS:

EXAMPLE

RC - 1190 - 08

MODEL ARRANGEMENT SIZE

Cabinet Unit Heater
Label Placement

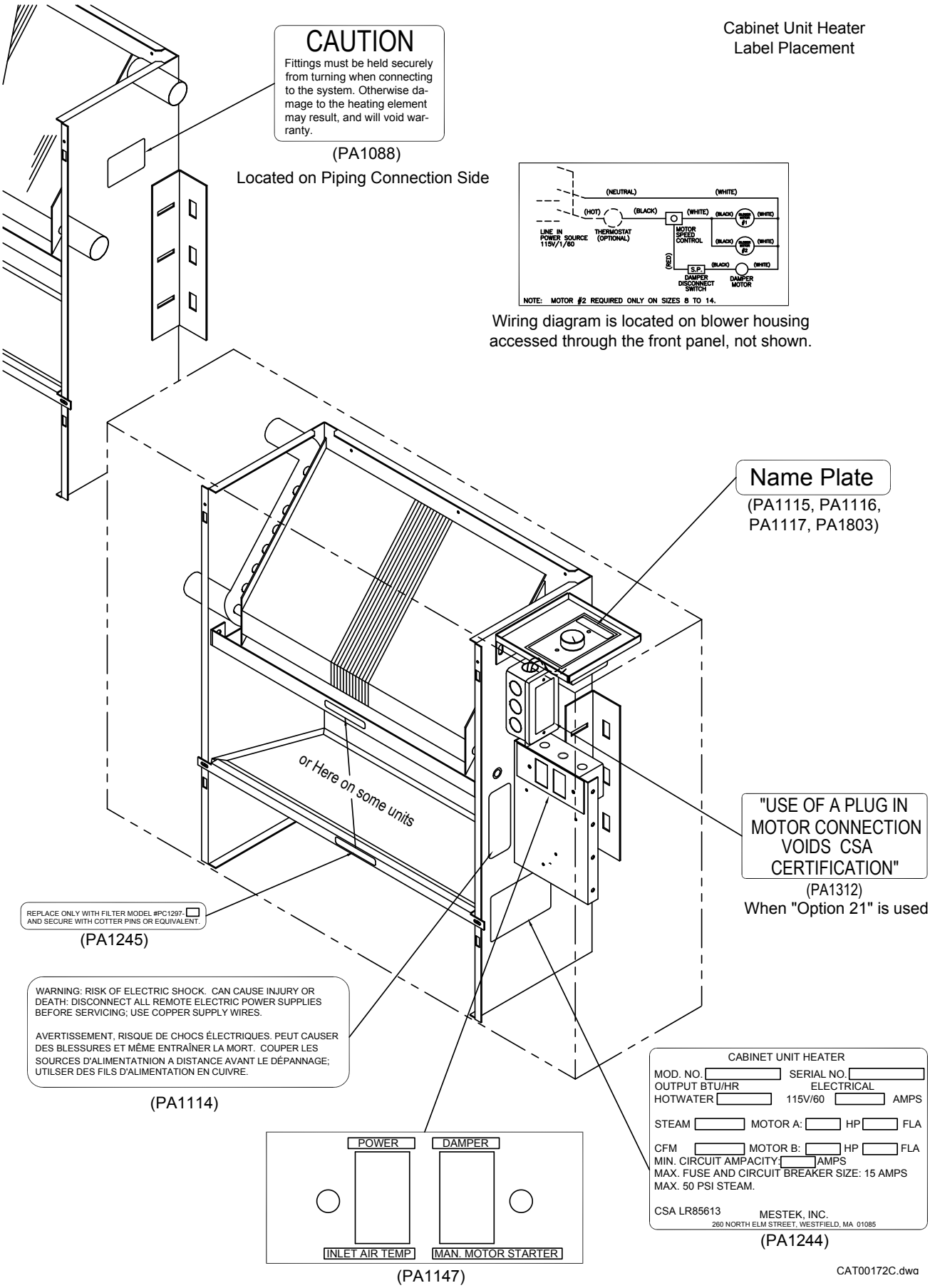

Cabinet Unit Heater
Option
10
Factory Installed

LIMITED ACCESS
FASTENER
"FRONT PANEL"

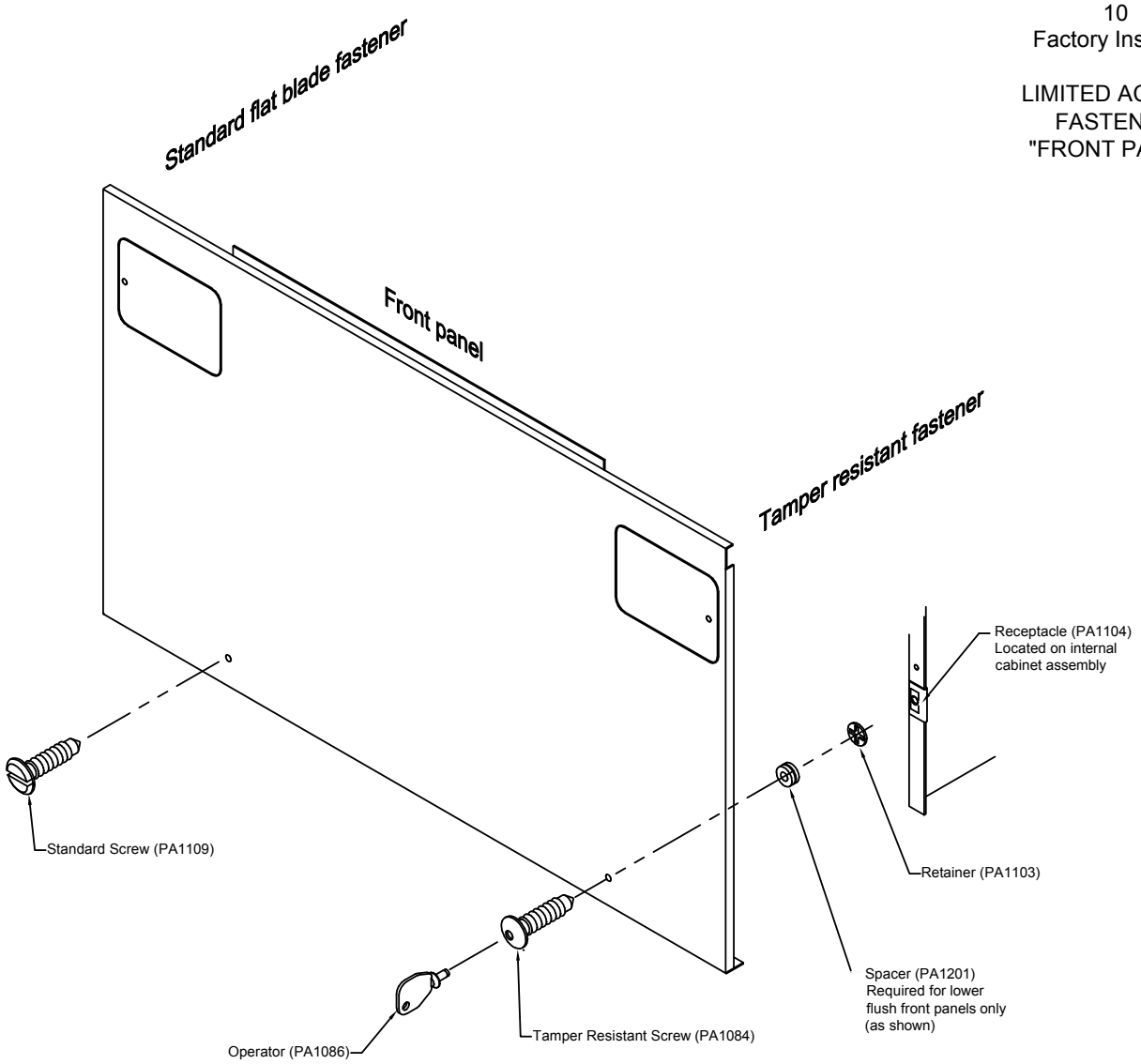

Standard Front Panel Fastener				
Screw	Retainer	Receptacle	Spacer	Operator
PA1109	PA1103	PA1104	PA1201	Flat Blade

Option 10 Front Panel Fastener				
Screw	Retainer	Receptacle	Spacer	Operator
PA1084	PA1103	PA1104	PA1201	PA1086

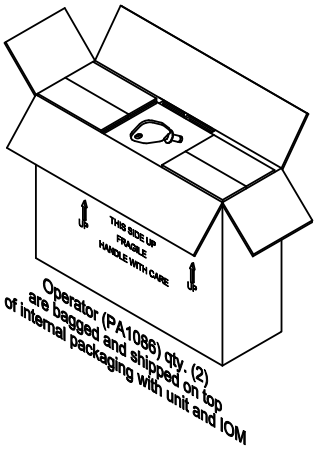

AVAILABLE ON ALL MODELS

CAT00173C. dwg

Cabinet Unit Heater
Option
11
Factory Installed

LIMITED ACCESS
FASTENER
"ACCESS DOORS"

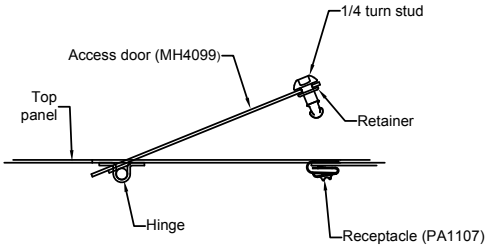

Top door assembly

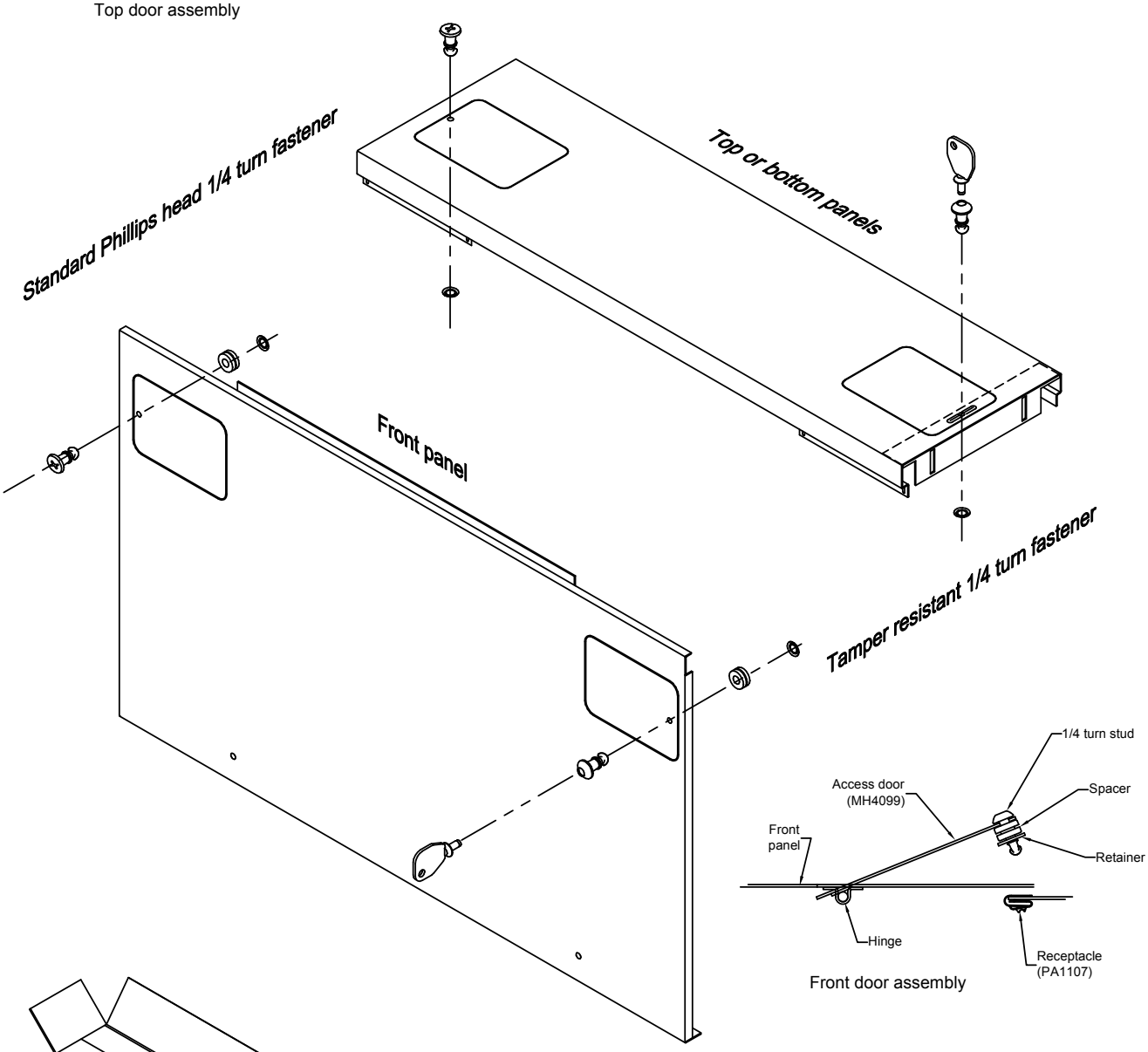

Front door assembly

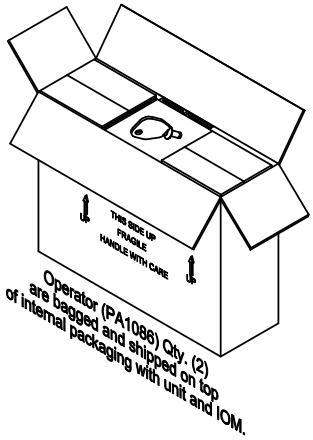

Standard Access Door Fastener				
Panel	Stud	Retainer	Spacer	Operator
Front	PA2037	PA1103	PA2038	Phillips
Top	PA2036	PA1108	None	Phillips

Option 11 Access Door Fastener				
Panel	Stud	Retainer	Spacer	Operator
Front	PA2042	PA1103	PA2038	PA1086
Top	PA1085	PA1108	None	PA1086

NOT AVAILABLE ON CEILING OR
RECESSED CEILING MODELS

CAT00174C.dwg

Cabinet Unit Heater
Option
12
Factory Installed

EXTRUDED ALUMINUM GRILLE
42% Free Area
(Not available in place of louvers on Option 17)

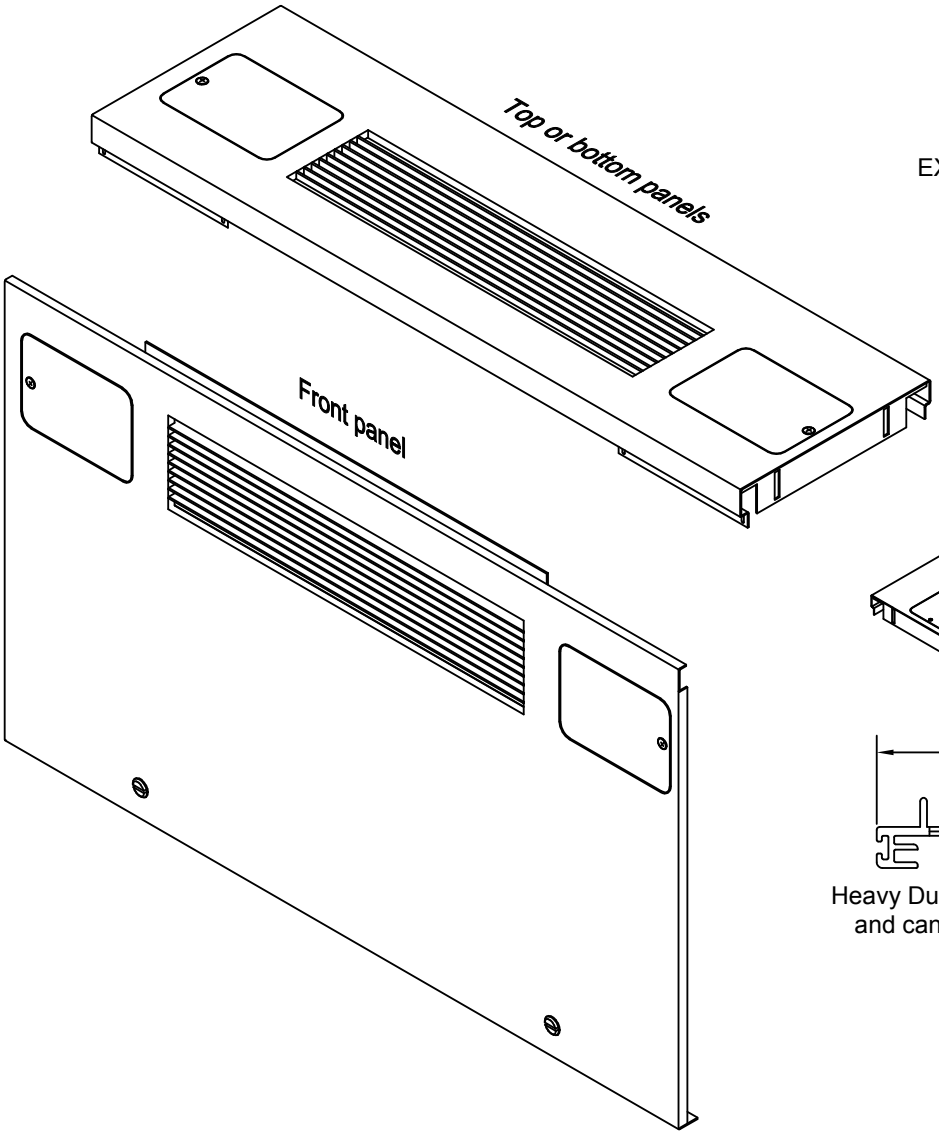

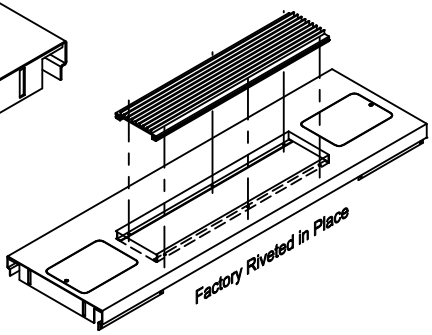

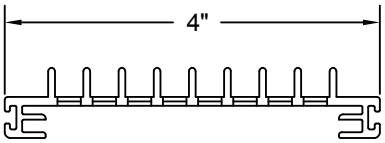

Heavy Duty Grille has clear anodized finish and can be painted to match decorator colors if so specified.

In place of standard Louvers

Standard panel table			
Model	Front panel	Top panel	Bottom panel
F-1000	MH-5500	MH-3500	-
F-1010	MH-5500	MH-3500	-
F-1020	MH-5502	MH-3014	-
F-1030	MH-5502	MH-3014	-
FI-1040	MH-5500	MH-3500	-
FI-1050	MH-5502	MH-3014	-
FS-1005	MH-5500	MH-3102	-
FS-1015	MH-5500	MH-3102	-
FS-1025	MH-5502	MH-3101	-
FS-1035	MH-5502	MH-3101	-
FSI-1045	MH-5500	MH-3102	-
FSI-1055	MH-5502	MH-3101	-
W-1060	MH-5506	MH-3500	MH-3534
W-1070	MH-5509	MH-3014	MH-3534
W-1080	MH-5513	MH-3014	MH-3014
WI-1090	MH-5506	MH-3500	MH-3534
WI-1100	MH-5509	MH-3014	MH-3534
WI-1110	MH-5513	MH-3014	MH-3014
RW-1120	MH-5513	MH-3014	MH-3014
RWI-1130	MH-5513	MH-3014	MH-3014
C-1140	MH-5153	MH-3534	MH-3534
C-1150	MH-5153	MH-3050	MH-3534
C-1160	MH-5151	MH-3014	MH-3534
C-1170	MH-5150	MH-3014	MH-3014
C-1180	MH-5152	MH-3534	MH-3014
RC-1190	MH-5152	MH-3014	MH-3050
RC-1200	MH-5150	MH-3014	MH-3014
RC-1210	MH-5153	MH-3050	MH-3050

Option 12 table				
Qty	Model	Front panel	Top panel	Bottom panel
1	F-1000	-	MH-3700	-
1	F-1010	-	MH-3700	-
1	F-1020	MH-5521	-	-
1	F-1030	MH-5521	-	-
1	FI-1040	-	MH-3700	-
1	FI-1050	MH-5521	-	-
1	FS-1005	-	MH-3103	-
1	FS-1015	-	MH-3103	-
1	FS-1025	MH-5521	-	-
1	FS-1035	MH-5521	-	-
1	FSI-1045	-	MH-3103	-
1	FSI-1055	MH-5521	-	-
2	W-1060	-	MH-3700	MH-3702
2	W-1070	MH-5522	-	MH-3702
2	W-1080	MH-5523	-	-
2	WI-1090	-	MH-3700	MH-3702
2	WI-1100	MH-5522	-	MH-3702
2	WI-1110	MH-5523	-	-
2	RW-1120	MH-5523	-	-
2	RWI-1130	MH-5523	-	-
2	C-1140	-	MH-3702	MH-3702
1	C-1150	-	-	MH-3702
2	C-1160	MH-5159	-	MH-3702
2	C-1170	MH-5155	-	-
2	C-1180	MH-5157	MH-3702	-
1	RC-1190	MH-5157	-	-
2	RC-1200	MH-5155	-	-
0	RC-1210	-	-	-

CAT00175D.dwg

Cabinet Unit Heater
Option
13
Factory Painted

DECORATOR COLOR

See Current Color
Chart For Selections

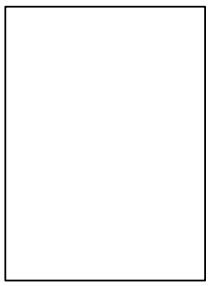

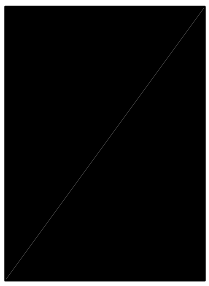

We do offer other than the standard ho-hum.

A Decorator Color may be selected from our optional Color Chart. A prime coat of neutral eggshell baked powder is standard unless otherwise specified. This may be the final finish or it may be painted in the field if necessary.

CAT00176A.dwg

Cabinet Unit Heater
Option
17
Factory Installed

LOUVERED INLET GRILLE
FOR
FLOOR MOUNTED UNITS

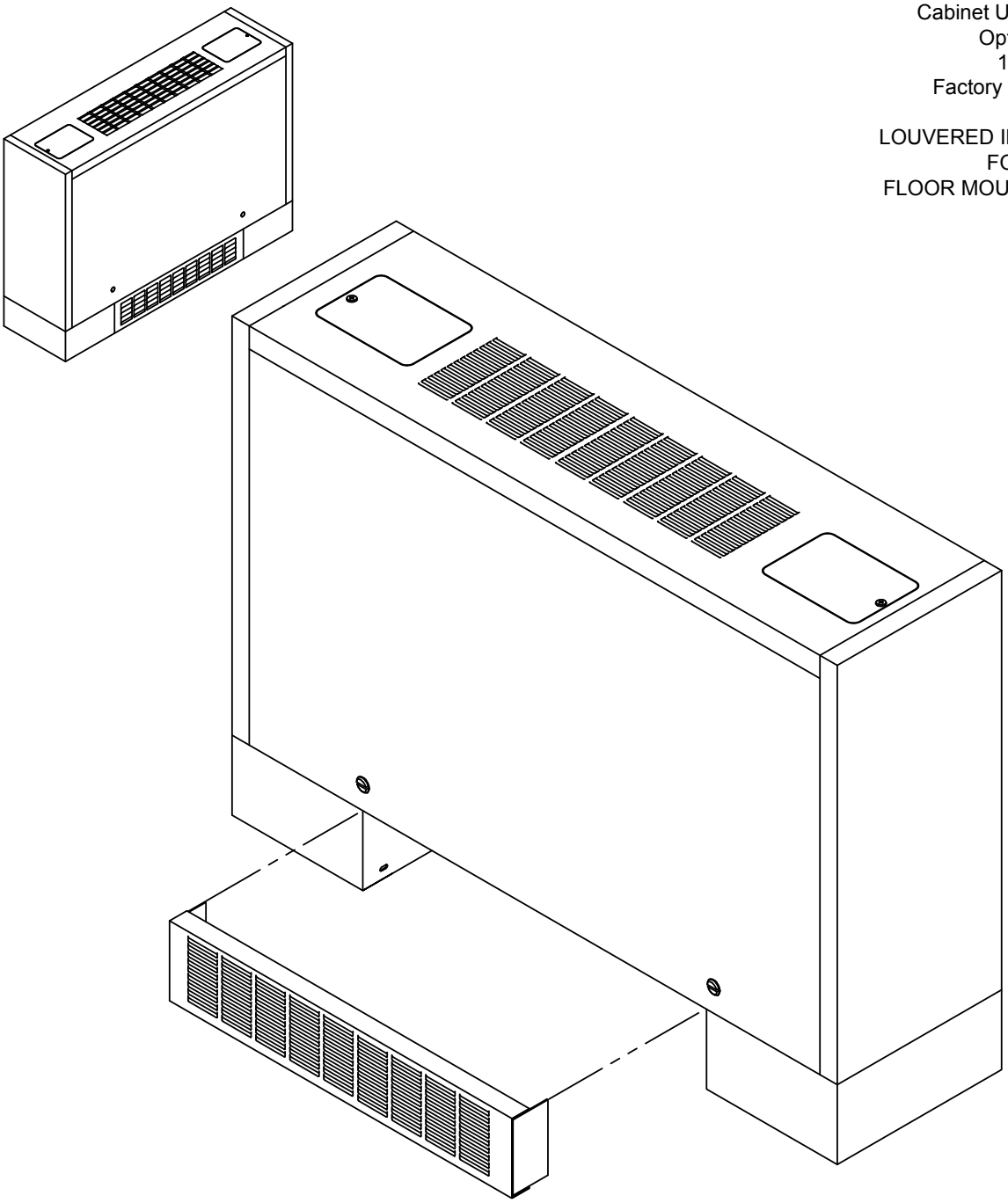

Recommended for use with Options 18, 19, 118, and 119 if used with F or FS units.
18 gauge steel, baked powder finish.

Option 17		
Size	Part Number	Dimensions
02	MH-4140-02	4" H x 19-51/64" Long
03	MH-4140-03	4" H x 27-51/64" Long
04	MH-4140-04	4" H x 31-51/64" Long
06	MH-4140-06	4" H x 43-51/64" Long
08	MH-4140-08	4" H x 45-51/64" Long
10	MH-4140-10	4" H x 50-51/64" Long
12	MH-4140-12	4" H x 57-51/64" Long
14	MH-4140-14	4" H x 69-51/64" Long

Standard on "FI" & FSI Models
Optional on "F" & FS Models

CAT00177E.DWG

Cabinet Unit Heater
Option
18
Factory Installed

25% MANUAL OUTSIDE
AIR DAMPER

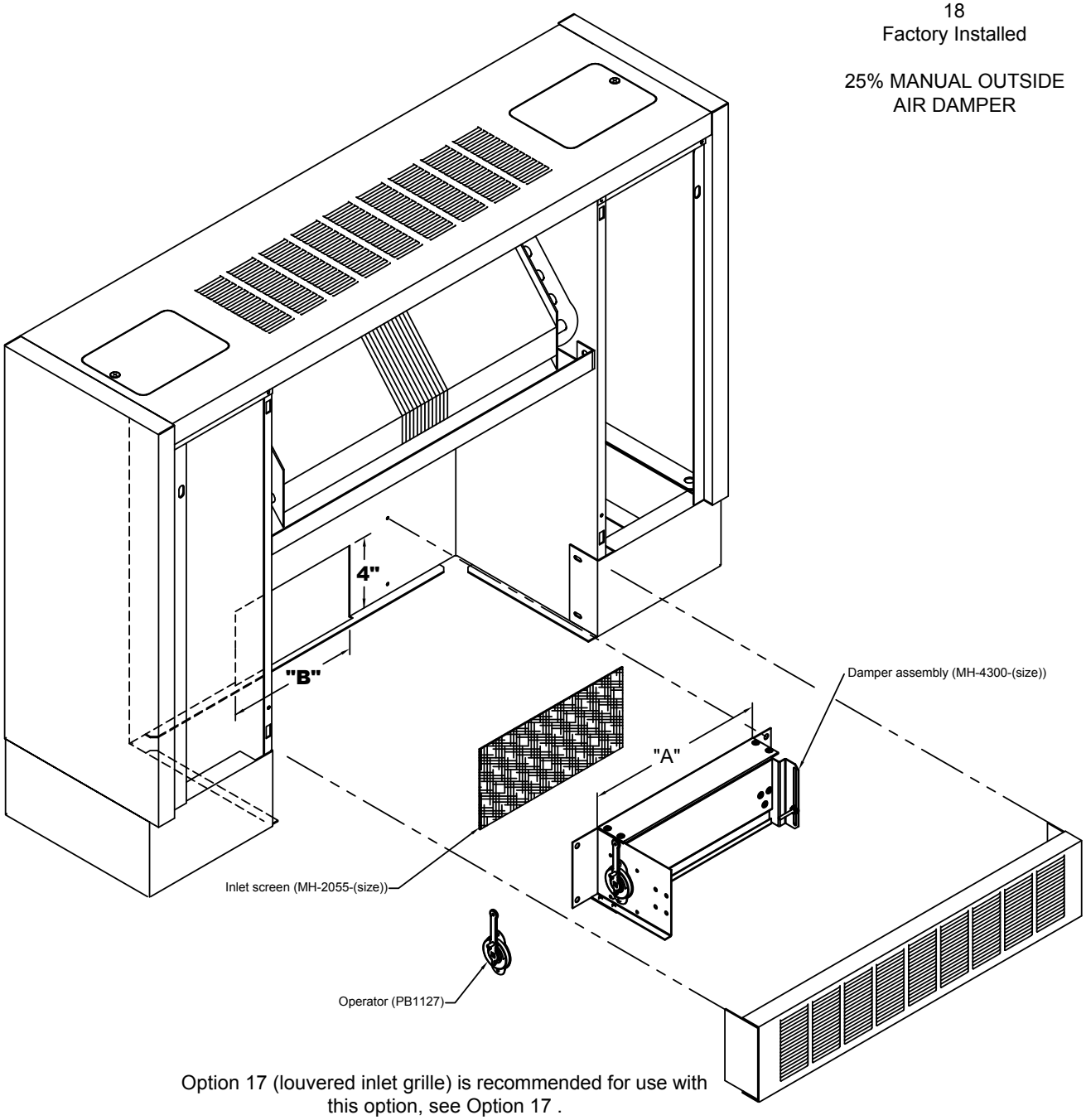

Option 17 (louvered inlet grille) is recommended for use with this option, see Option 17 .

25% manual outside air damper - Outside air intake can be adjusted from 0 to 25%. Control is by manual quadrant. Option 18 or 19 must be ordered with models F-1010, F-1030, FS-1015 and FS-1035. For floor units only.

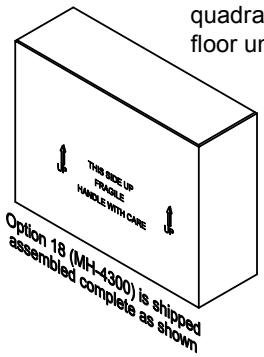

Installed on unit(s) at the factory.

Option 18			
Size	Part No.	"A"	"B"
02	MH-4300-01	8-3/16"	6-1/8"
03	MH-4300-01	8-3/16"	6-1/8"
04	MH-4300-01	8-3/16"	6-1/8"
06	MH-4300-02	12-11/16"	10-5/8"
08	MH-4300-02	12-11/16"	10-5/8"
10	MH-4300-02	12-11/16"	10-5/8"
12	MH-4300-03	18-11/16"	16-5/8"
14	MH-4300-03	18-11/16"	16-5/8"

CAT00178D.dwg

Cabinet Unit Heater
Option
19
Factory Installed

25% MOTORIZED OUTSIDE AIR DAMPER

25% motorized outside air damper - Opens outside air intake to 25% when motor(s) start. Closes when motor(s) stop. Service switch is provided to prevent damper operation when desired. Option 18 or 19 must be ordered with models F-1010, F-1030, FS-1015 and FS-1035. For floor units only.

Please refer to wiring diagram below.

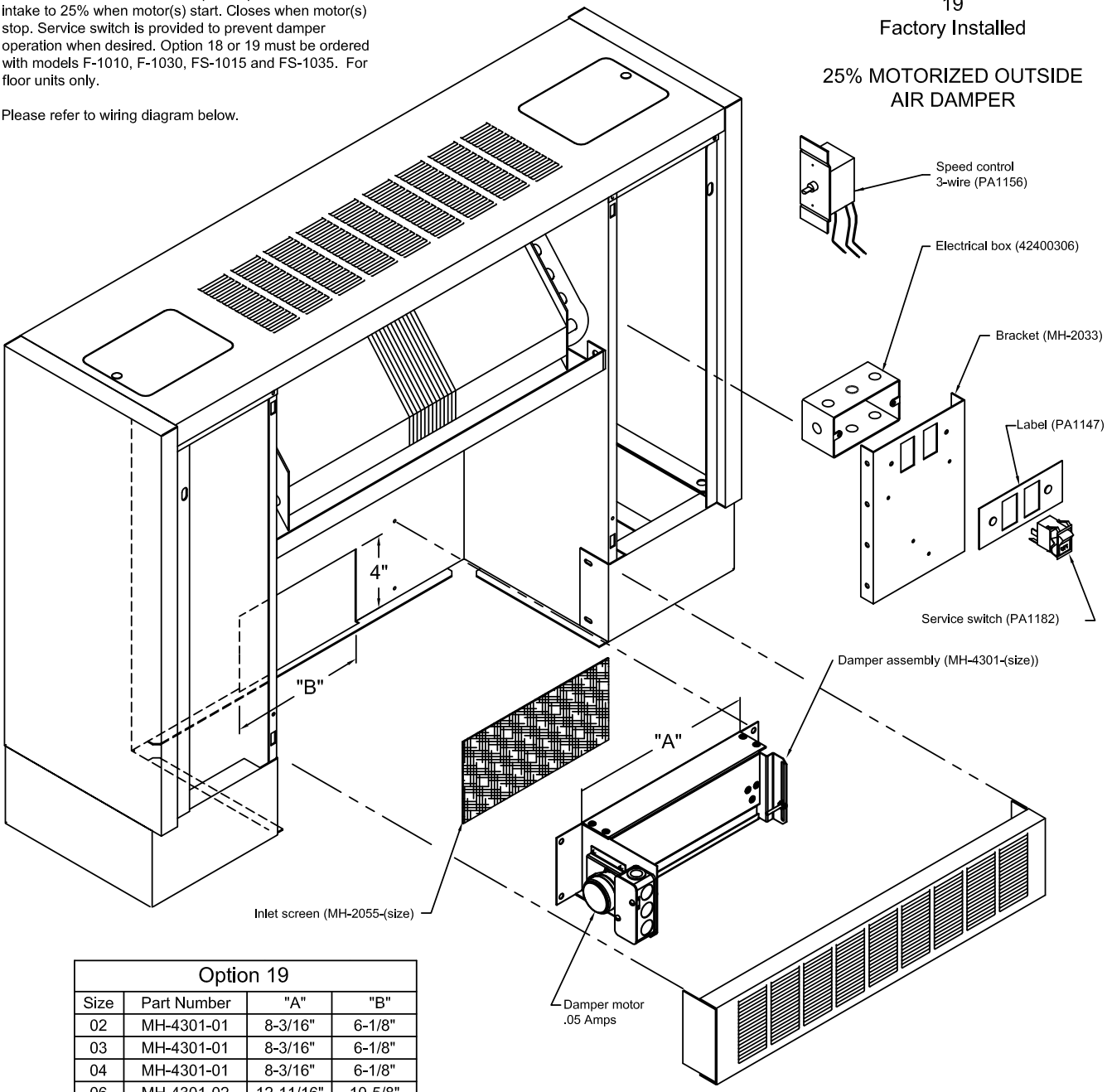

Option 19			
Size	Part Number	"A"	"B"
02	MH-4301-01	8-3/16"	6-1/8"
03	MH-4301-01	8-3/16"	6-1/8"
04	MH-4301-01	8-3/16"	6-1/8"
06	MH-4301-02	12-11/16"	10-5/8"
08	MH-4301-02	12-11/16"	10-5/8"
10	MH-4301-02	12-11/16"	10-5/8"
12	MH-4301-03	18-11/16"	16-5/8"
14	MH-4301-03	18-11/16"	16-5/8"

Option 17 (louvered inlet grille) is recomended for use with this option, see option 17.

Installed on unit(s) at the factory.

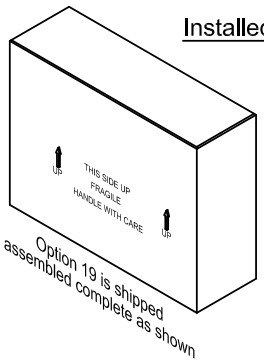

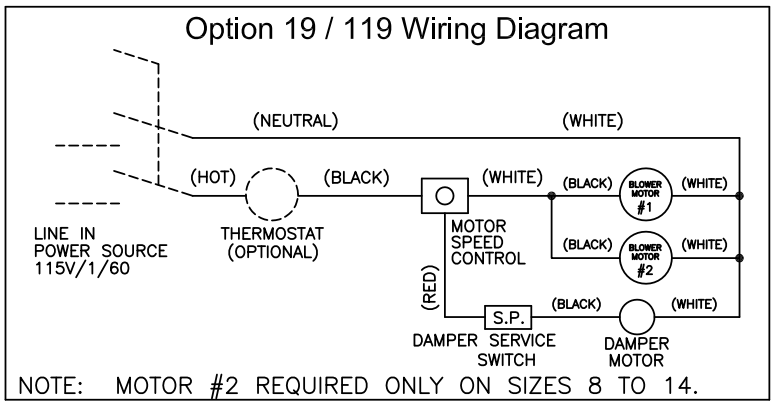

CAT-00179G.dwg

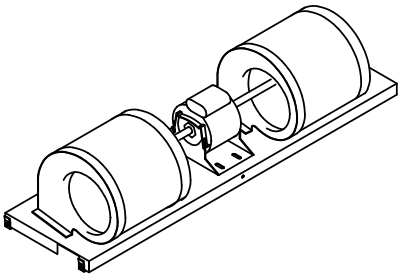

Cabinet Unit Heater
Option
20
Factory Installed

HIGH STATIC MOTOR
1/11 HP, 1550 RPM 115/1/60 PSC

Maintains standard CFM
against 0.4" W.C. max.

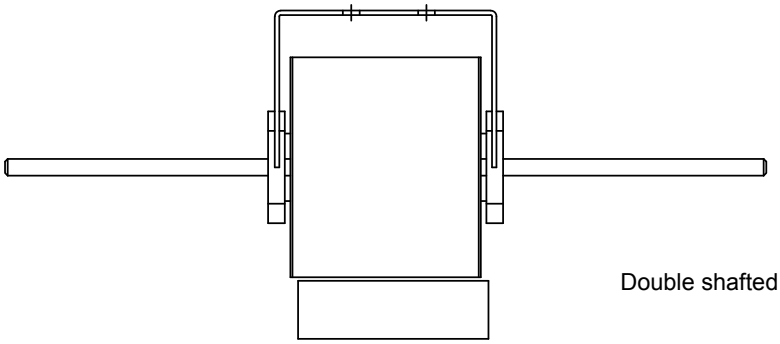

Double shafted shown

This option consists of a motor specified to overcome the external static pressure when duct work is attached to the inlet or outlet of the Cabinet Unit Heater. This motor is approximately the same physical size and configuration as the standard one; therefore, they are physically interchangeable. In terms of performance it is rated at 1/11 HP at 1550 RPM.

With this high static motor installed, the Cabinet Unit Heaters are able to maintain standard airflow with external static pressure up to 0.4" water column.

Standard motors			Option 20 motors		
Size	Part No.	Qty.	Part No.	Qty.	Amps
02	PA1620	1	PC1320 Single	1	1.24
03	PA1620	1	PC1320 Single	1	1.24
04	PA1621	1	PC1320 Double	1	1.24
06	PA1621	1	PC1320 Double	1	1.24
08	PA1620, PA1621	1 EA	PC1320 Single/Double	1 EA	2.48
10	PA1620, PA1621	1 EA	PC1320 Single/Double	1 EA	2.48
12	PA1621	2	PC1320 Double	2	2.48
14	PA1621	2	PC1320 Double	2	2.48

CAT00180B.dwg

Cabinet Unit Heater
Option
21
Factory Installed

PLUG-IN MOTOR

NOTE: USE OF THIS OPTION NEGATES THE CSA CERTIFICATION.

Wired and installed on unit(s) at the factory

The cord (PA1130) is (UL) / CSA water resistant heavy duty grounded plug 90°C (-40°C) 18/3. It is approx. 8'-0" long exiting the electrical box.

This is a plug-in cord for connection to a convenience outlet.

Shown with our floor model here, however, can be applied to all models.

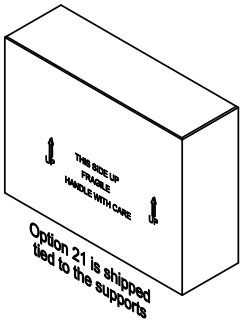

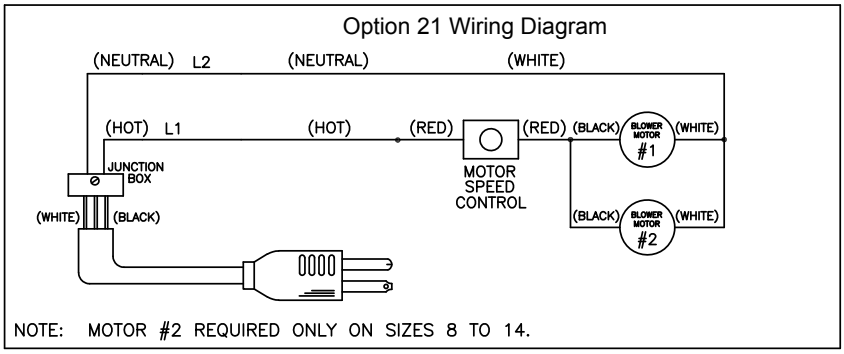

CAT00181B.dwg

Cabinet Unit Heater
Option
22
Factory Installed

MOTOR STARTER

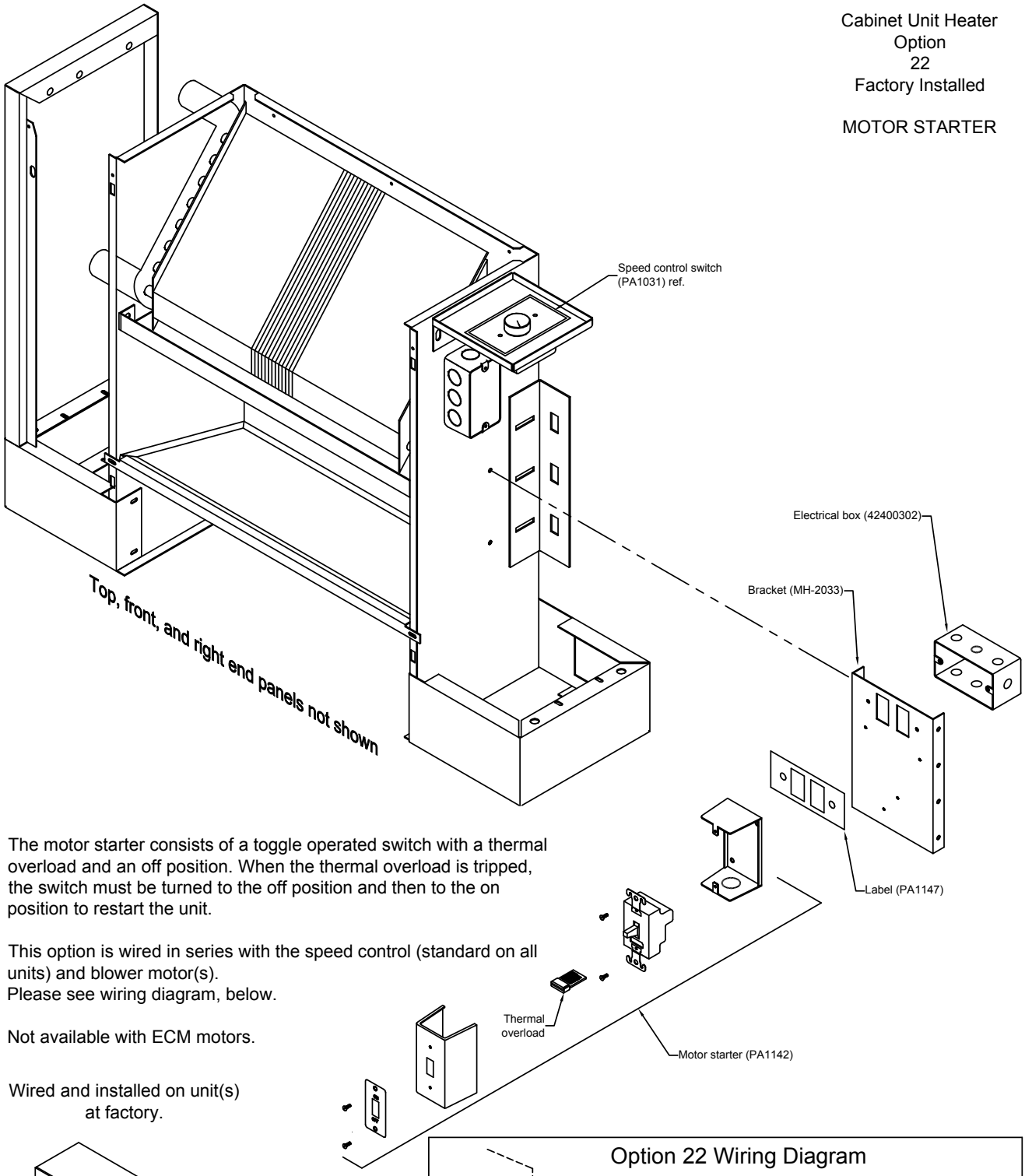

The motor starter consists of a toggle operated switch with a thermal overload and an off position. When the thermal overload is tripped, the switch must be turned to the off position and then to the on position to restart the unit.

This option is wired in series with the speed control (standard on all units) and blower motor(s).
Please see wiring diagram, below.

Not available with ECM motors.

Wired and installed on unit(s)
at factory.

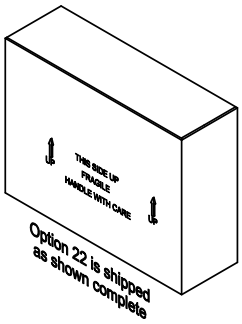

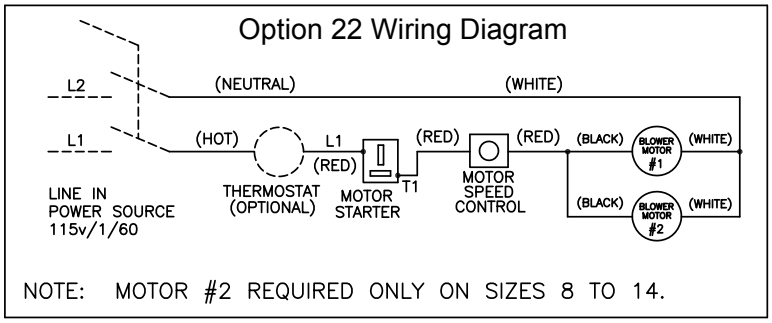

CAT00182C.dwg

Cabinet Unit Heater
Option
23
Factory Installed

SERVICE SWITCH
DPST

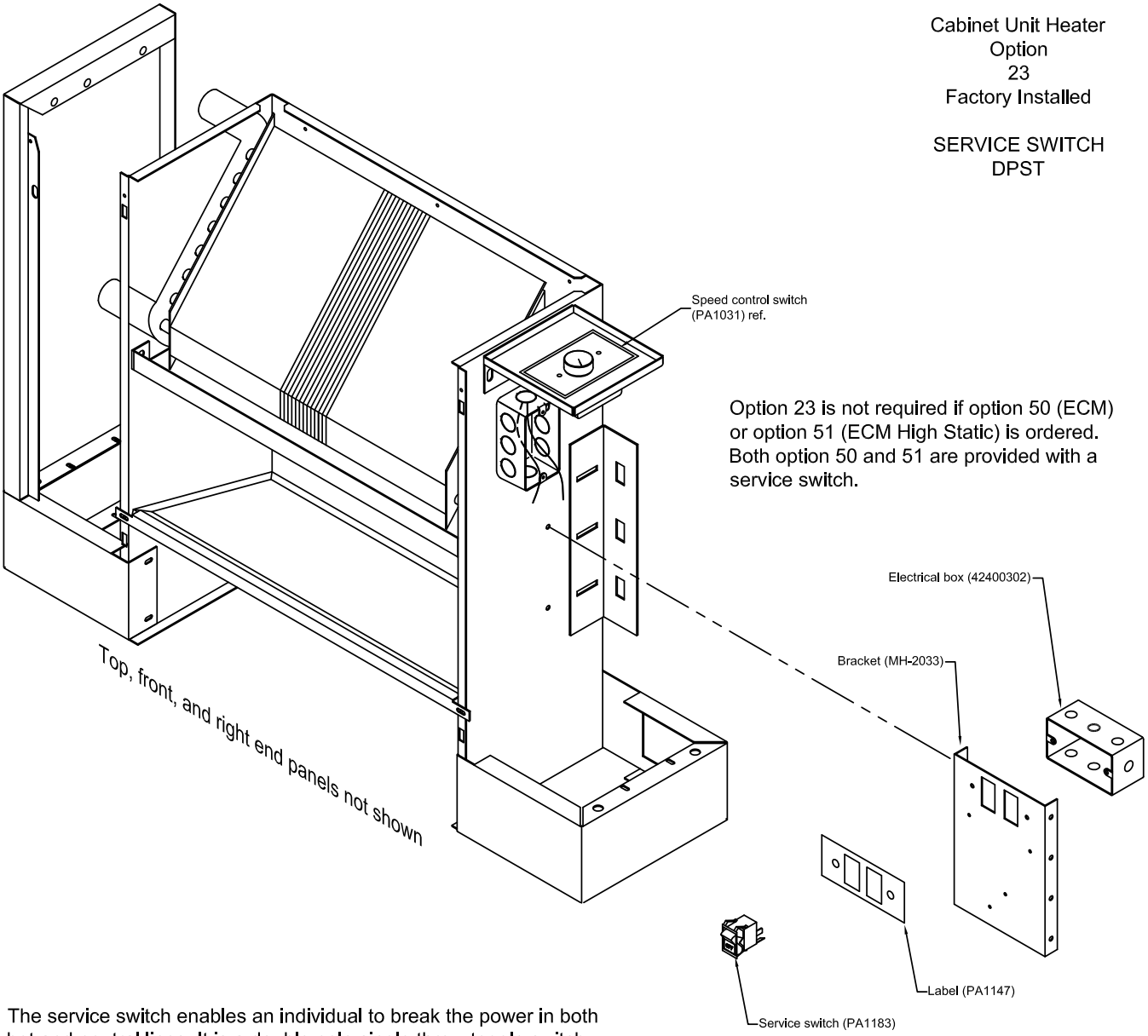

Option 23 is not required if option 50 (ECM) or option 51 (ECM High Static) is ordered. Both option 50 and 51 are provided with a service switch.

The service switch enables an individual to break the power in both hot and neutral lines. It is a double pole single throw toggle switch which is wired in series with all electrical loads in the cabinet unit heater. This switch is located beneath the speed control (standard on all units) it is accessed through the front panel.

Please see wiring diagram below.

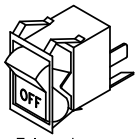

Enlarged

Wired and installed on unit(s) at factory.

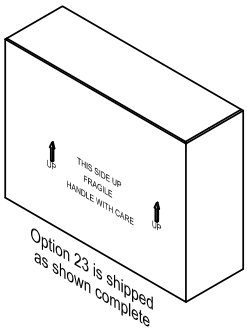

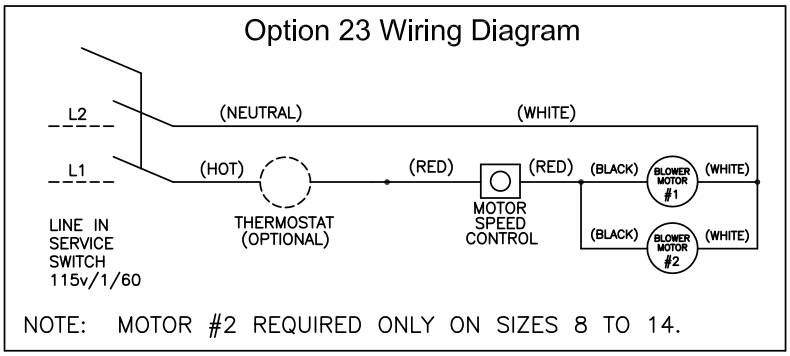

CAT00183D.dwg

Cabinet Unit Heater
Option
24F
24C
Factory Installed

RETURN AIR TEMPERATURE CONTROL

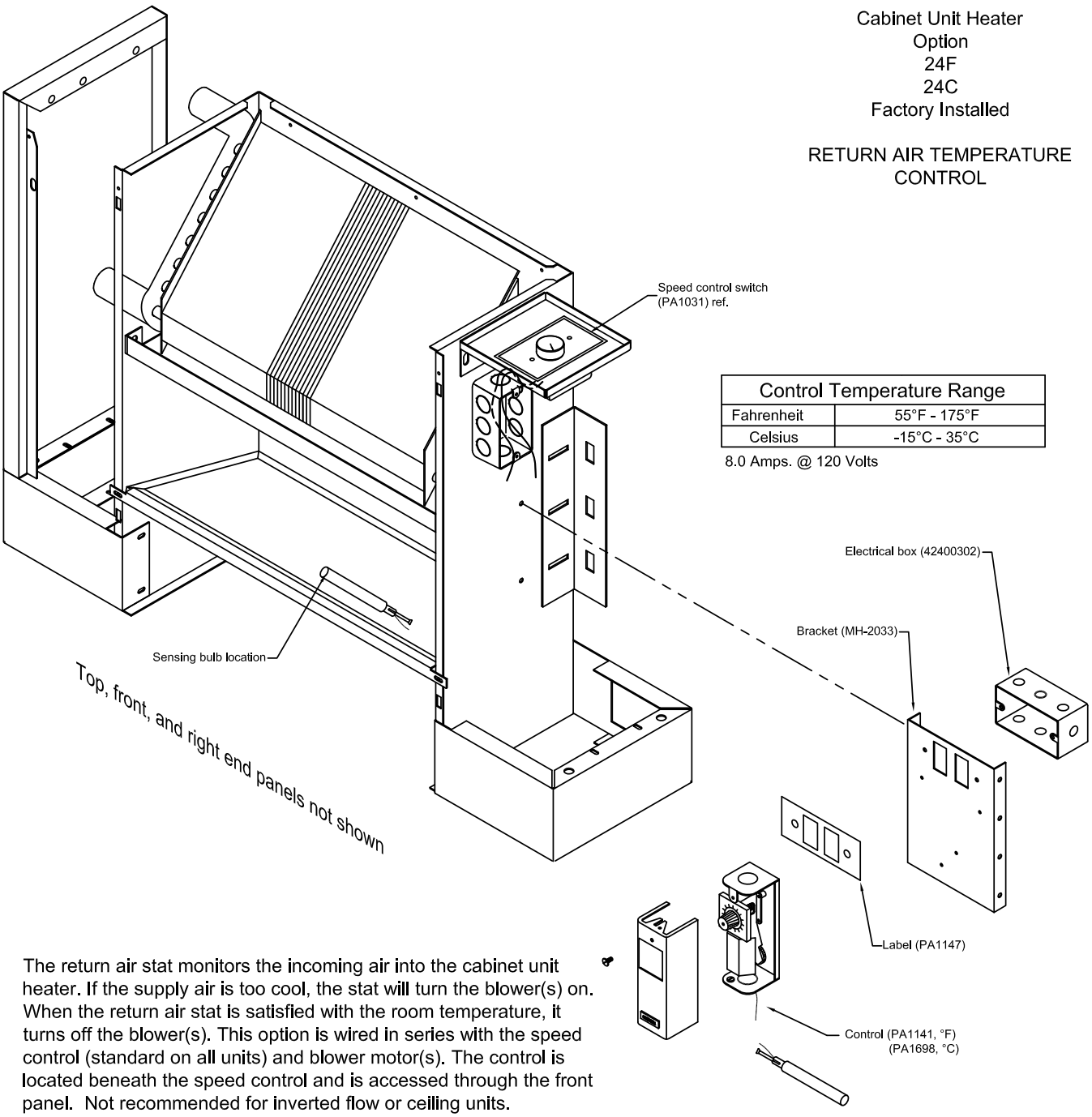

Control Temperature Range	
Fahrenheit	55°F - 175°F
Celsius	-15°C - 35°C

8.0 Amps. @ 120 Volts

The return air stat monitors the incoming air into the cabinet unit heater. If the supply air is too cool, the stat will turn the blower(s) on. When the return air stat is satisfied with the room temperature, it turns off the blower(s). This option is wired in series with the speed control (standard on all units) and blower motor(s). The control is located beneath the speed control and is accessed through the front panel. Not recommended for inverted flow or ceiling units.

Please see wiring diagram below.

Wired and installed on unit(s) at factory

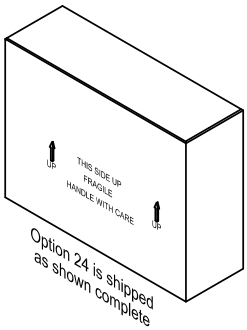

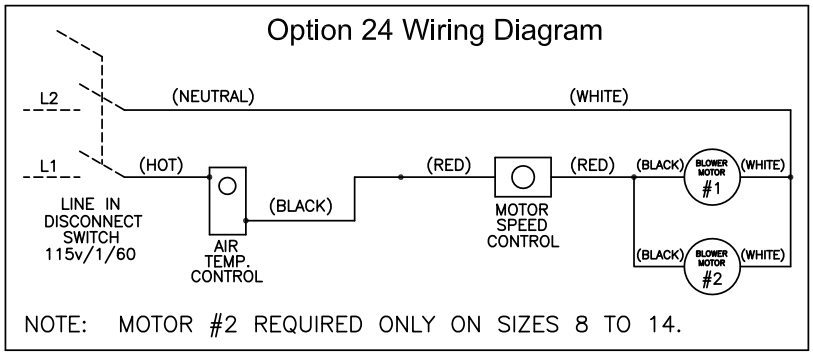

CAT00184D.dwg

Cabinet Unit Heater
Option
26
Factory Installed

RIGHT HAND COIL
CONNECTION

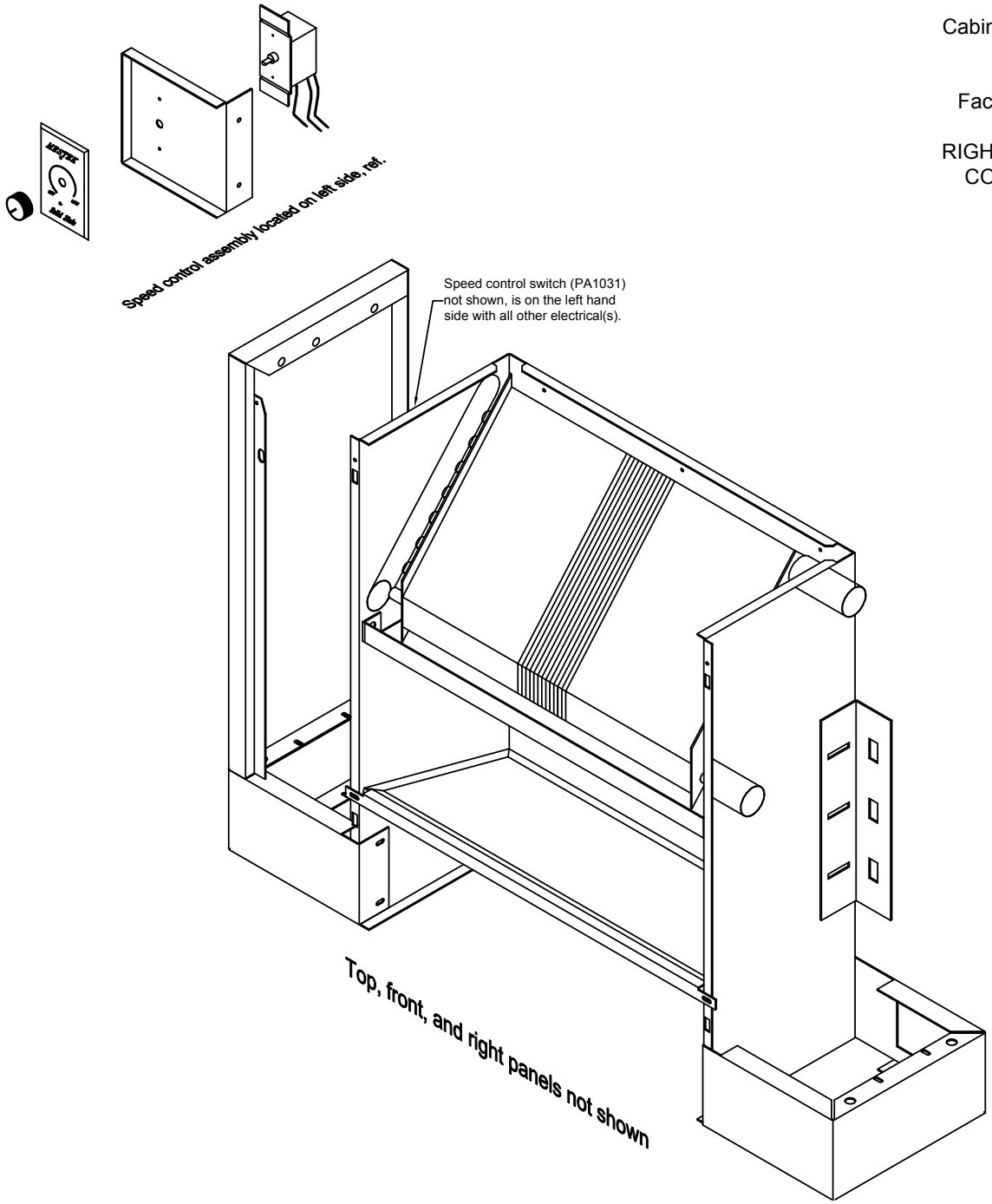

Coil will be factory mounted with piping connection on right hand side of unit. Electrical connection and speed control device will be factory wired and installed on left hand side of unit(s).

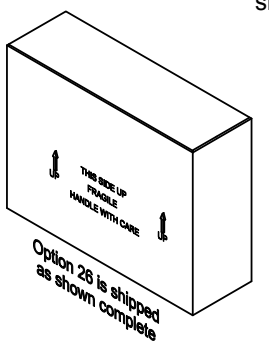

CAT00185A.dwg

Cabinet Unit Heater
Option
27
Factory Painted

SPECIAL COLOR
Consult Factory

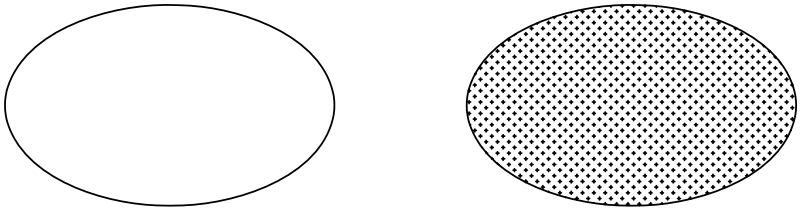

Alternatives to the standard color offerings.

A Special Color Selection can be added to the job specification by either the architect or the owner. Due to the large number of colors and paint products available today, it is necessary to go through a submittal and approval process prior to a commitment.

Please contact our sales staff for your inquiries.

Option 27 Special Color Procedure

A minimum of two (2) or more samples, preferably on the material to be used by the factory (steel, aluminum, etc.) must be provided (submitted in advance of an order) to the factory. If possible, the paint manufacturer and manufacturers part number should also accompany the samples. If this is not possible, a chip from a color chart may be provided.
The factory will then select a paint manufacturer to formulate the match. Two (2) matched samples will be returned, for approval.
The factory will not produce product until one of the color samples is returned with a written approval.

CAT00186C.dwg

Cabinet Unit Heater
Option
28
Factory Installed

INSULATED EXTERNAL CABINET

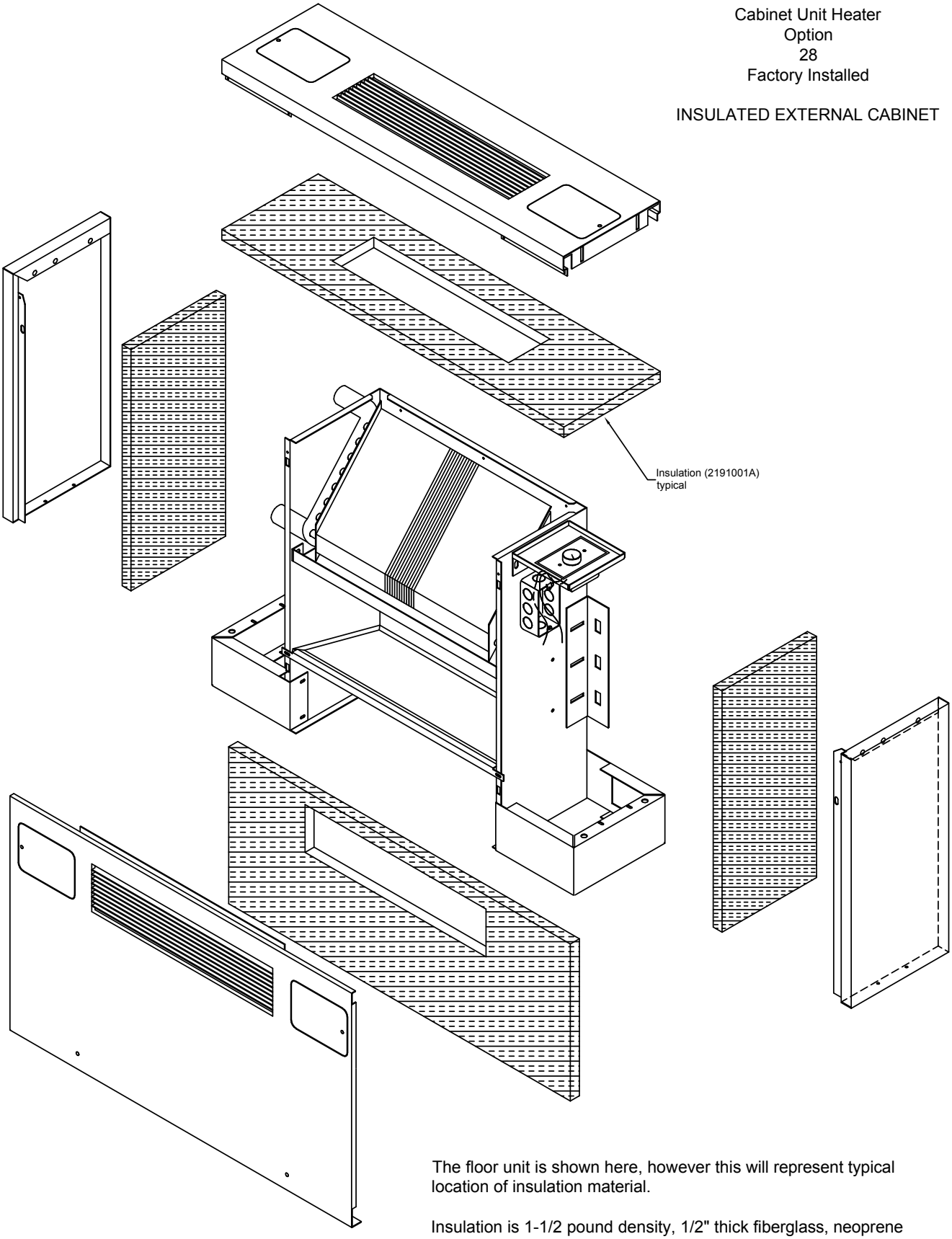

The floor unit is shown here, however this will represent typical location of insulation material.

Insulation is 1-1/2 pound density, 1/2" thick fiberglass, neoprene coated one (1) side and adhered to each panel prior to assembly.

CAT00187D.dwg

Cabinet Unit Heater
Option
29
Factory Installed

HIGH CAPACITY
TWO ROW COIL

"WATER ONLY"

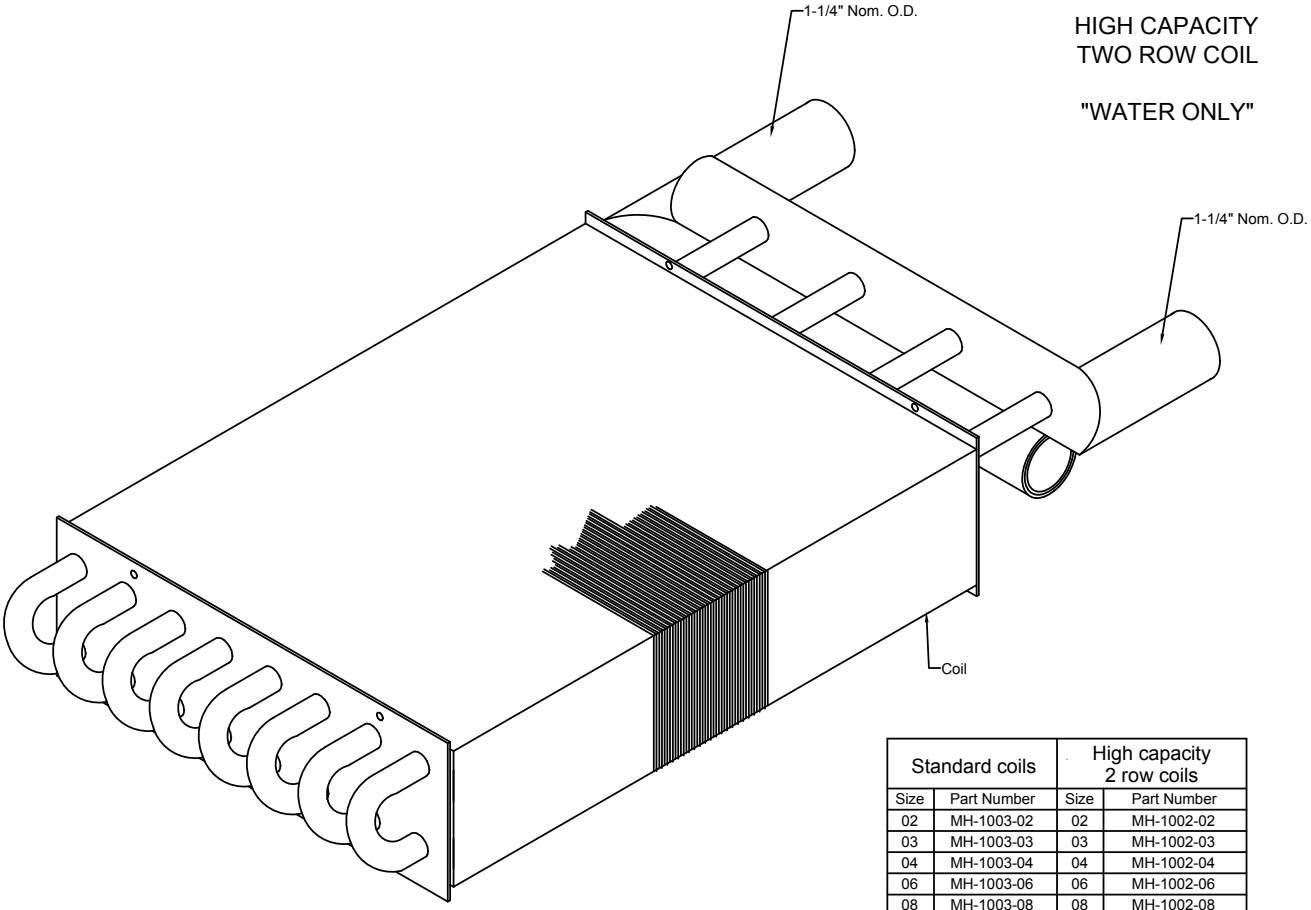

Standard coils		High capacity 2 row coils	
Size	Part Number	Size	Part Number
02	MH-1003-02	02	MH-1002-02
03	MH-1003-03	03	MH-1002-03
04	MH-1003-04	04	MH-1002-04
06	MH-1003-06	06	MH-1002-06
08	MH-1003-08	08	MH-1002-08
10	MH-1003-10	10	MH-1002-10
12	MH-1003-12	12	MH-1002-12
14	MH-1003-14	14	MH-1002-14

This is a Hot Water coil designed to provide increased capacity when the required load exceeds that of the standard coil for a given size. Fins are double depth and there are two rows of tubes.

The durable mechanically bonded copper/aluminum coil presents the best of today's hydronic technology. Providing 12 fins per inch with 1/2" nominal diameter tubes, the ultimate in BTU capacity is provided without sacrificing noise, vibration or amp draw.

All units are designed so that field modifications can be made to reverse the coil position if required.

CAT00188C.dwg

Cabinet Unit Heater
Option
30
Factory Installed

FOIL FACED INSULATION
FRONT PANEL

(COIL AREA ONLY)

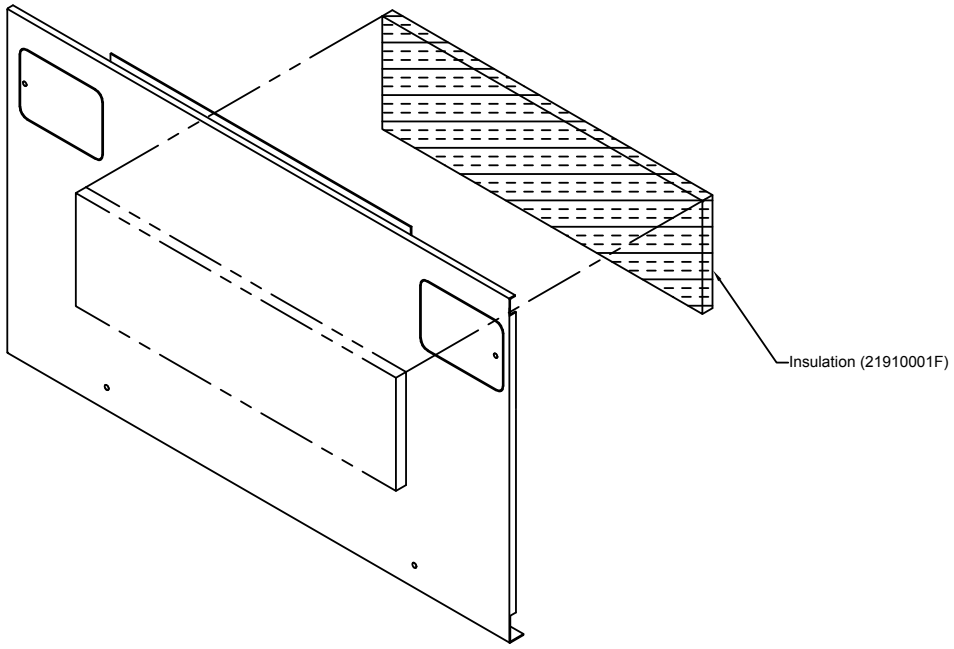

The floor unit front panel is shown here, however this will represent typical location of insulation material. Insulation will replace standard insulation around coil area only.

Insulation is 1/2" thick foil faced and adhered to front panel prior to assembly.

CAT-84540B.dwg

Cabinet Unit Heater
Option
31
Factory Installed

FOIL FACED INSULATION
EXTERNAL CABINET

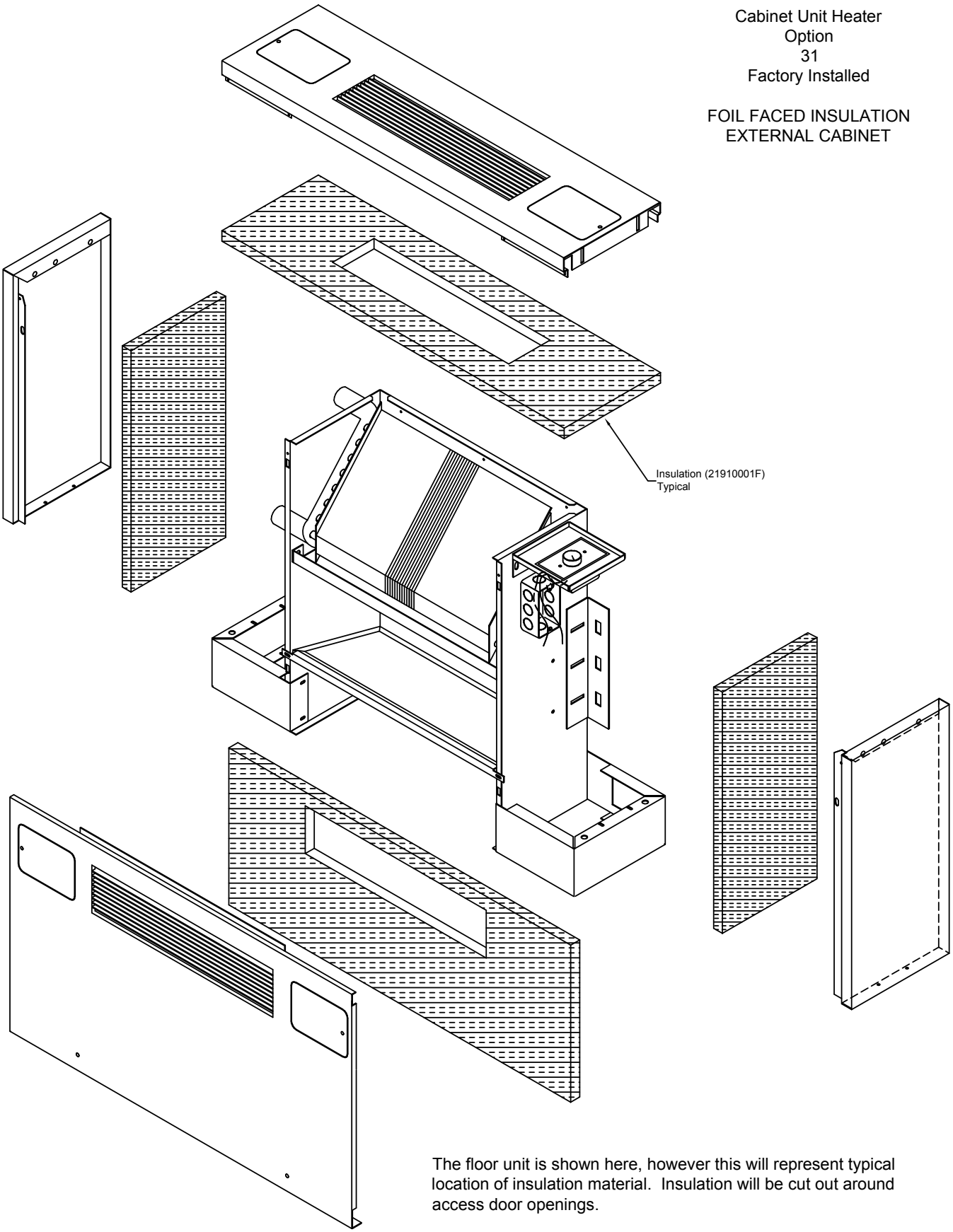

The floor unit is shown here, however this will represent typical location of insulation material. Insulation will be cut out around access door openings.

Insulation is 1/2" thick fiberglass, foil coated one (1) side and adhered to each panel prior to assembly.

CAT-84541C.dwg

Cabinet Unit Heater
Option
32
Factory Installed

CLOSED CELL INSULATION
FRONT PANEL

(COIL AREA ONLY)

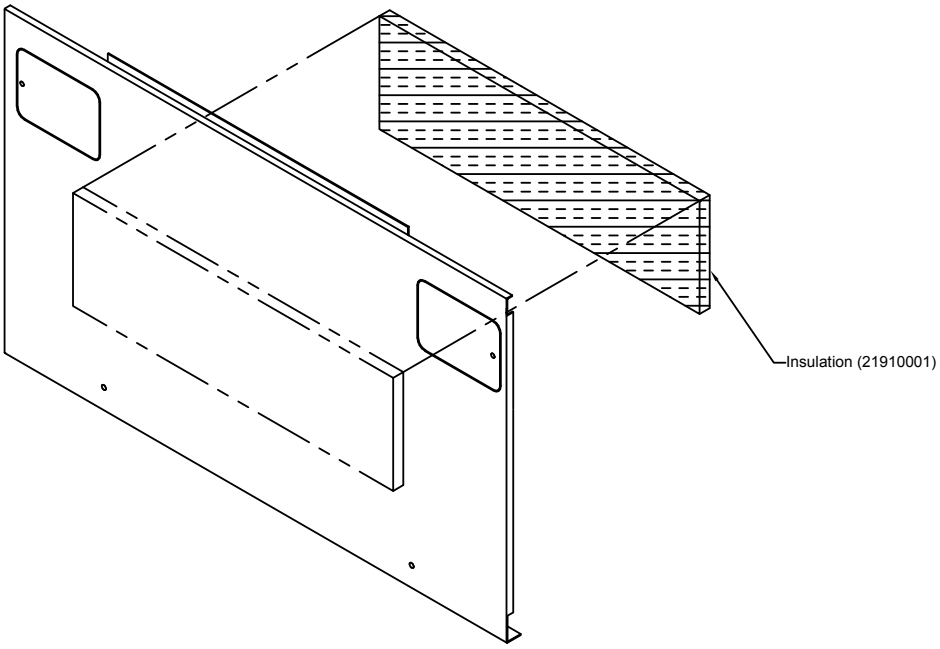

The floor unit front panel is shown here, however this will represent typical location of insulation material. Insulation will replace standard insulation around coil area only.

Insulation is 3/8" thick closed cell foam and adhered to front panel prior to assembly.

CAT-84542B.dwg

Cabinet Unit Heater
Option
33
Factory Installed

CLOSED CELL FOAM INSULATION
EXTERNAL CABINET

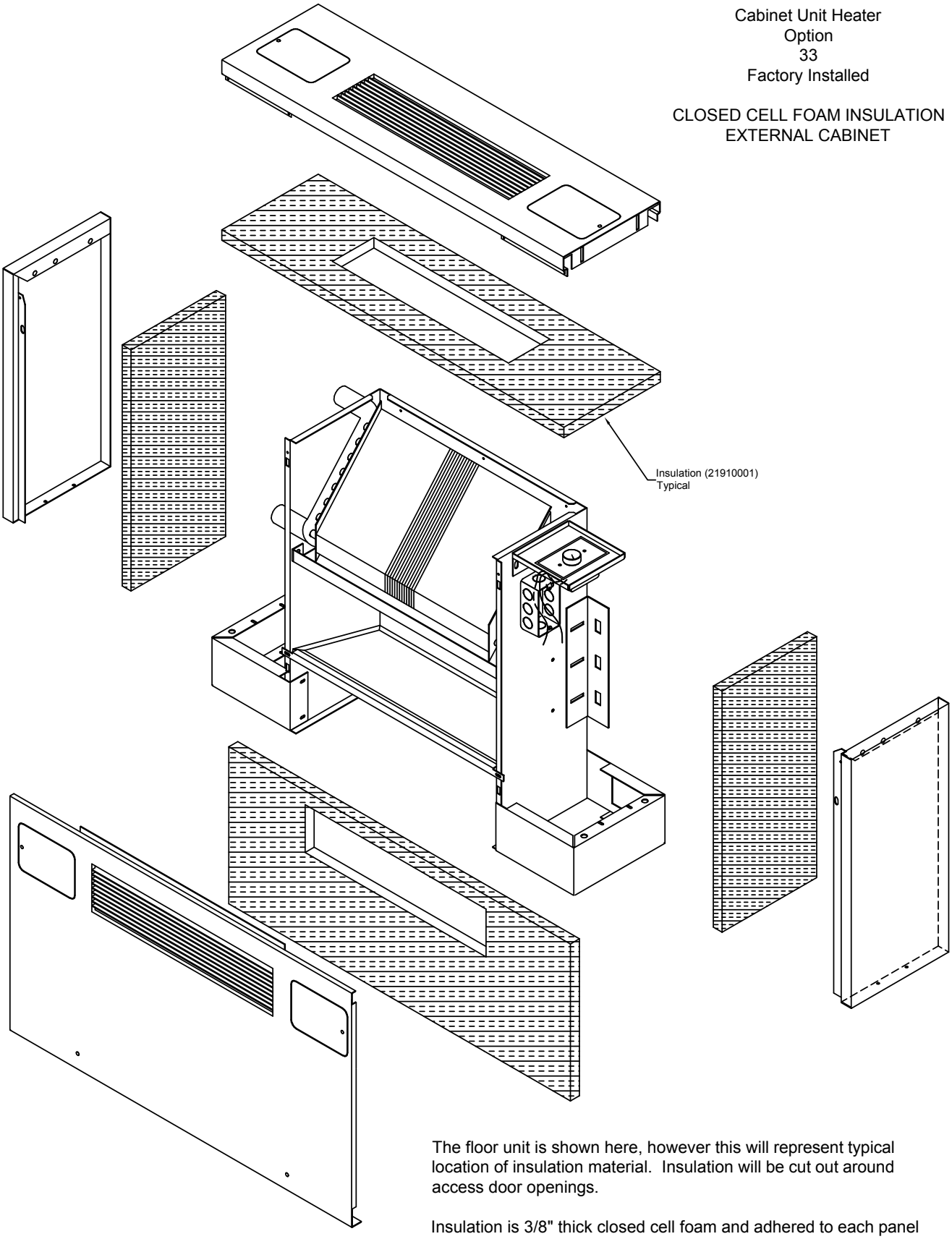

The floor unit is shown here, however this will represent typical location of insulation material. Insulation will be cut out around access door openings.

Insulation is 3/8" thick closed cell foam and adhered to each panel prior to assembly.

CAT-84543B.dwg

Cabinet Unit Heater
Option
40
Factory Installed

24VAC TRANSFORMER

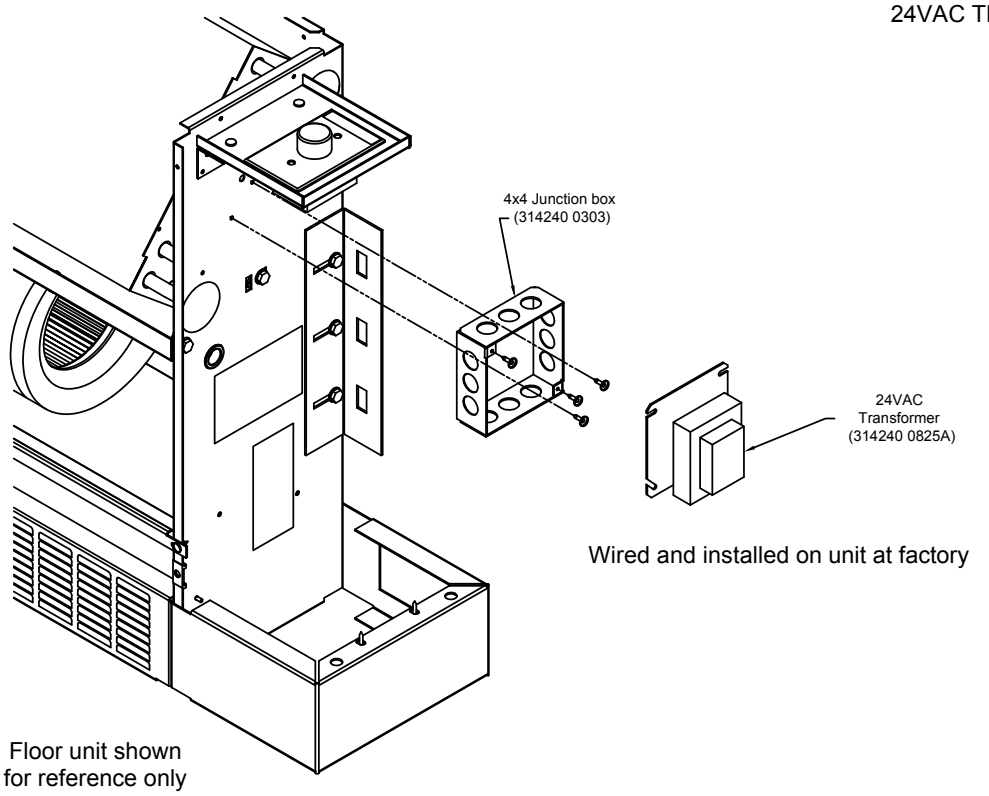

This option consists of a plate mounted 24VAC 40VA transformer and a 4x4 junction box. The 120VAC primary and 24VAC secondary connections are housed in the junction box.

This can be used for powering 24VAC devices such as control boards, low voltage thermostats, relays, valves, etc. Transformer is rated for 40VA maximum load.

Please see wiring diagram below.

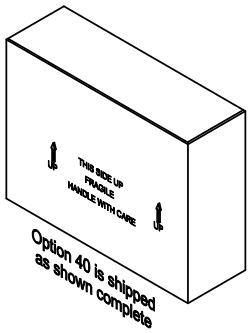

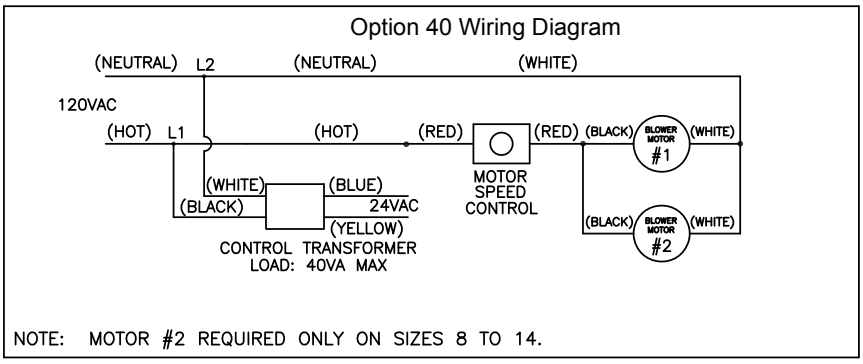

CAT80567A.dwg

Cabinet Unit Heater
Option
50
Factory Installed

ECM MOTOR WITH
INTERFACE CONTROL
BOARD AND
3 SPEED SWITCH

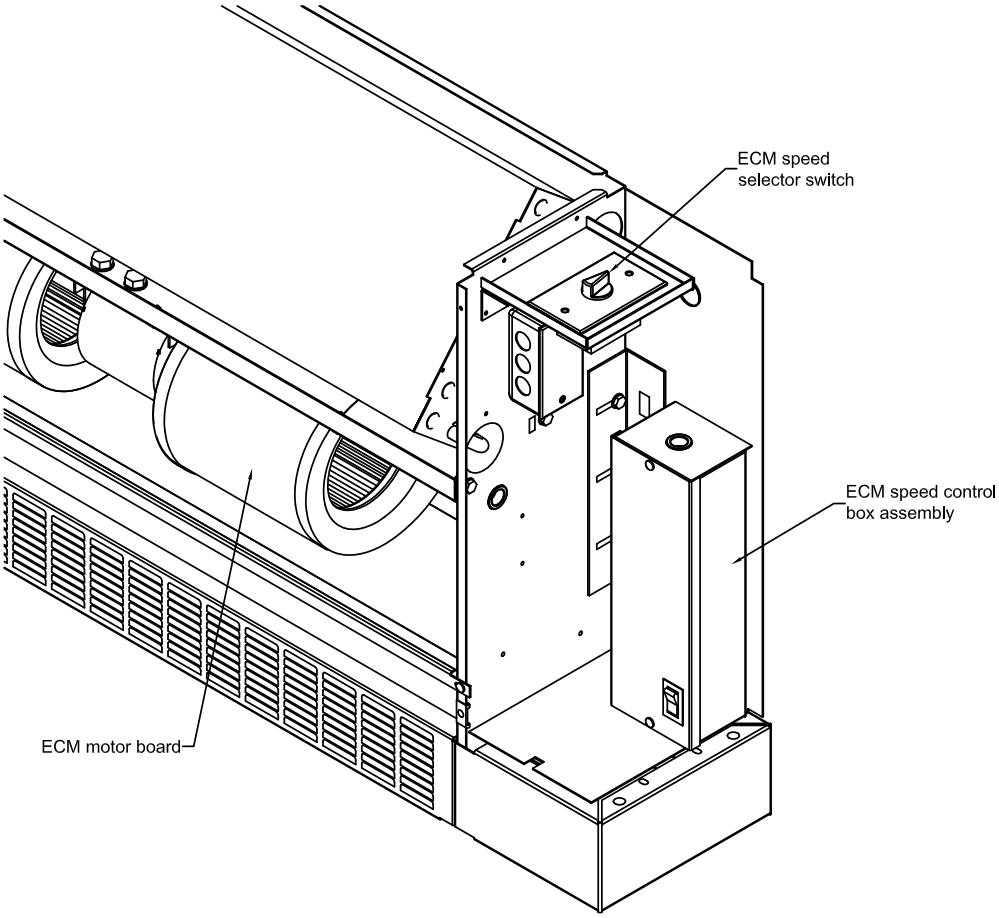

High efficiency Electronically Commutated Motors (ECM) utilize brushless DC motors which are coupled with an interface control board that provides speed control of the motors. When the thermostatic control calls for heat, the interface board will ramp the motor speed up to the RPM appropriate for the speed selector switch setting. The speed selector switch has four positions, Off-High-Medium-Low. The ramping up feature eliminates the need for an additional motor starter (Option 22 motor starter is not available with ECM). Thermostats with contacts rated for low voltage power will integrate easily with the variable speed capabilities to satisfy existing conditions.

Note: Thermostat option 127 can also be used in low voltage applications and is suitable for use with the ECM motors option.

Option 50 Is provided with a service switch. Option 23 is not required.

Wired and installed on unit(s) at factory.

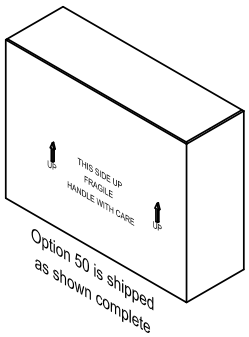

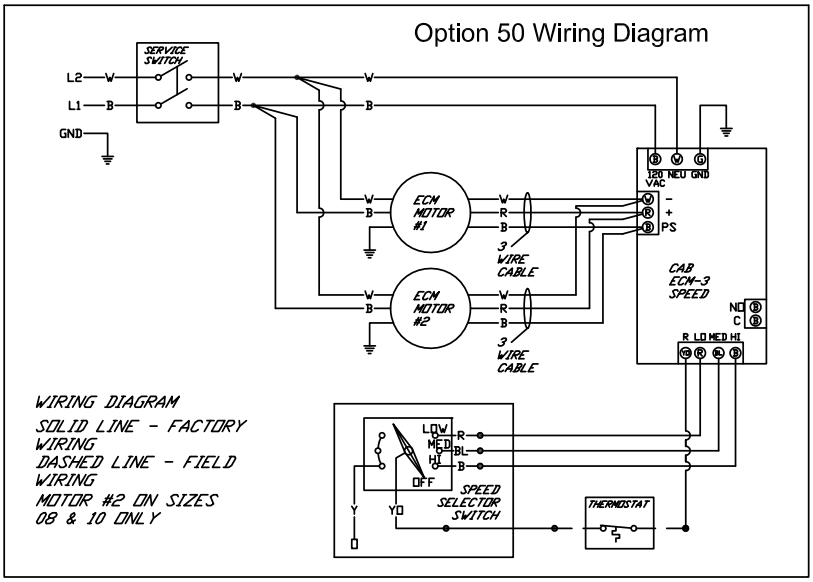

CAT84361F.dwg

Cabinet Unit Heater
Option
51
Factory Installed

ECM HIGH STATIC
MOTOR WITH
INTERFACE CONTROL
BOARD AND
3 SPEED SWITCH

Maintains standard CFM
against 0.4 W.C. max.

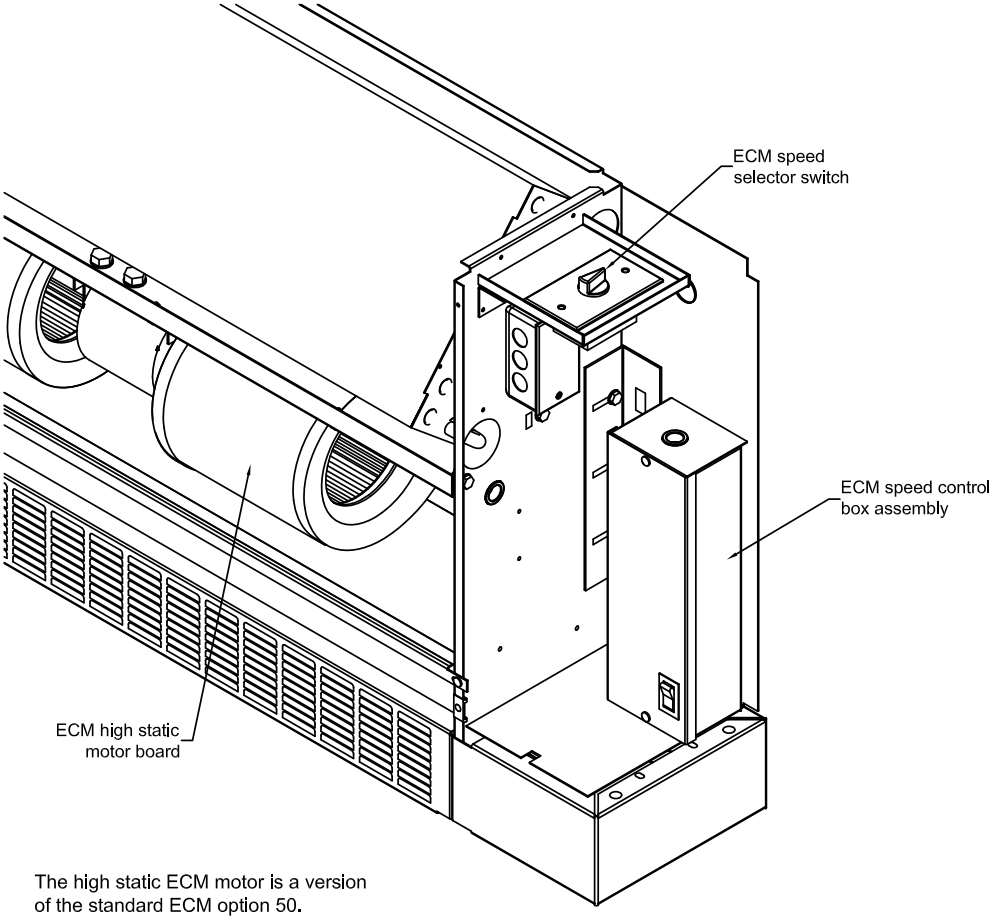

The high static ECM motor is a version of the standard ECM option 50.

This option consists of an ECM motor specifically designed to overcome the external static pressure when duct work is attached to the inlet, outlet or both of the cabinet unit heater. This motor is approximately the same physical size and configuration as the standard ECM motor. In terms of performance, the RPM is 1550 whereas the standard ECM motor operates at 1050 RPM. With this factory installed high static motor option, the cabinet unit heater will operate to maintain standard air flow (CFM) with external static pressures up to .4" water column.

The high efficiency electronically commutated motors (ECM) utilize brushless DC motors which are coupled with an interface control board that provides speed control of the motors. When the thermostatic control calls for heat, the interface board will ramp the motor speed up to the RPM appropriate for the speed selector switch setting. The speed selector switch has four positions, Off-High-Medium-Low. The ramping up feature eliminates the need for an additional motor starter (Option 22 motor starter is not available with ECM). Thermostats with contacts rated for low voltage power will integrate easily with the variable speed capabilities to satisfy existing conditions.

Note: Thermostat Option 127 can also be used in low voltage applications and is suitable for use with the ECM motors option.

Option 51 is provided with a service switch. Option 23 is not required.

Wired and installed on unit(s) at factory.

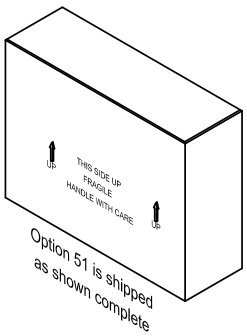

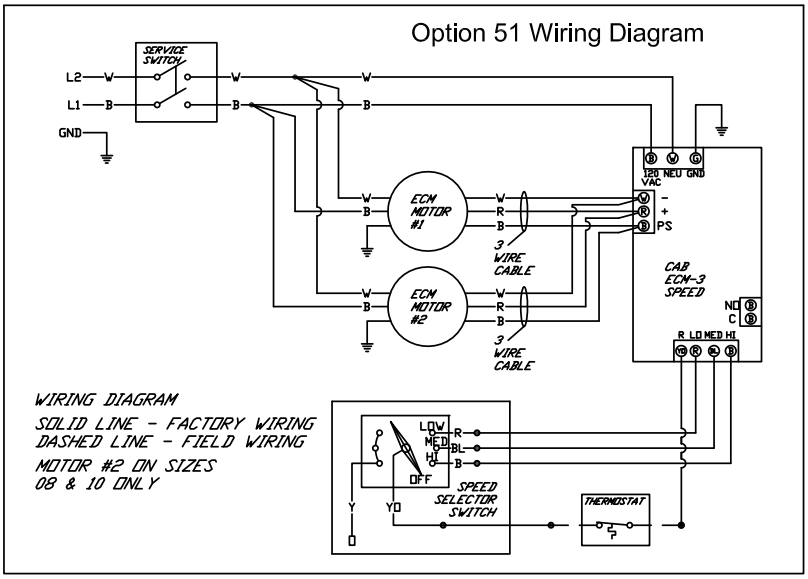

CAT87185D.dwg

Cabinet Unit Heater
Option
99
Factory Installed

14 GAUGE FRONT PANEL

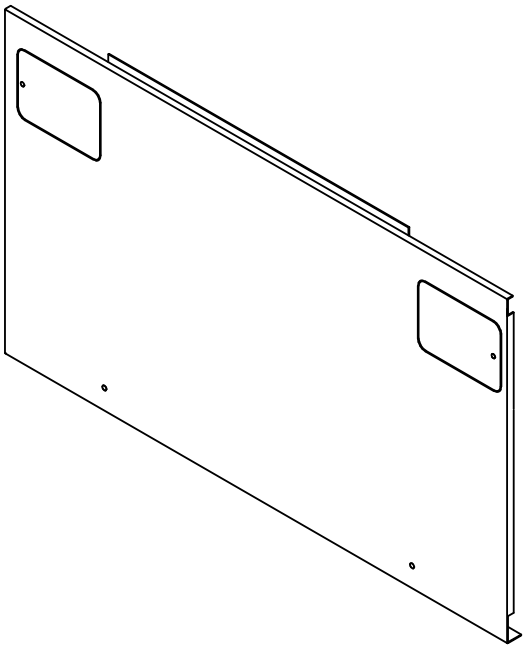

The floor unit front panel is shown for reference. Access doors and inlet/outlet locations will vary by model.

CAT-84544D.dwg

Cabinet Unit Heater
Option
114
Field Installed

DUCT COLLAR KIT

For Rectangular Opening
In Top and Bottom Panels

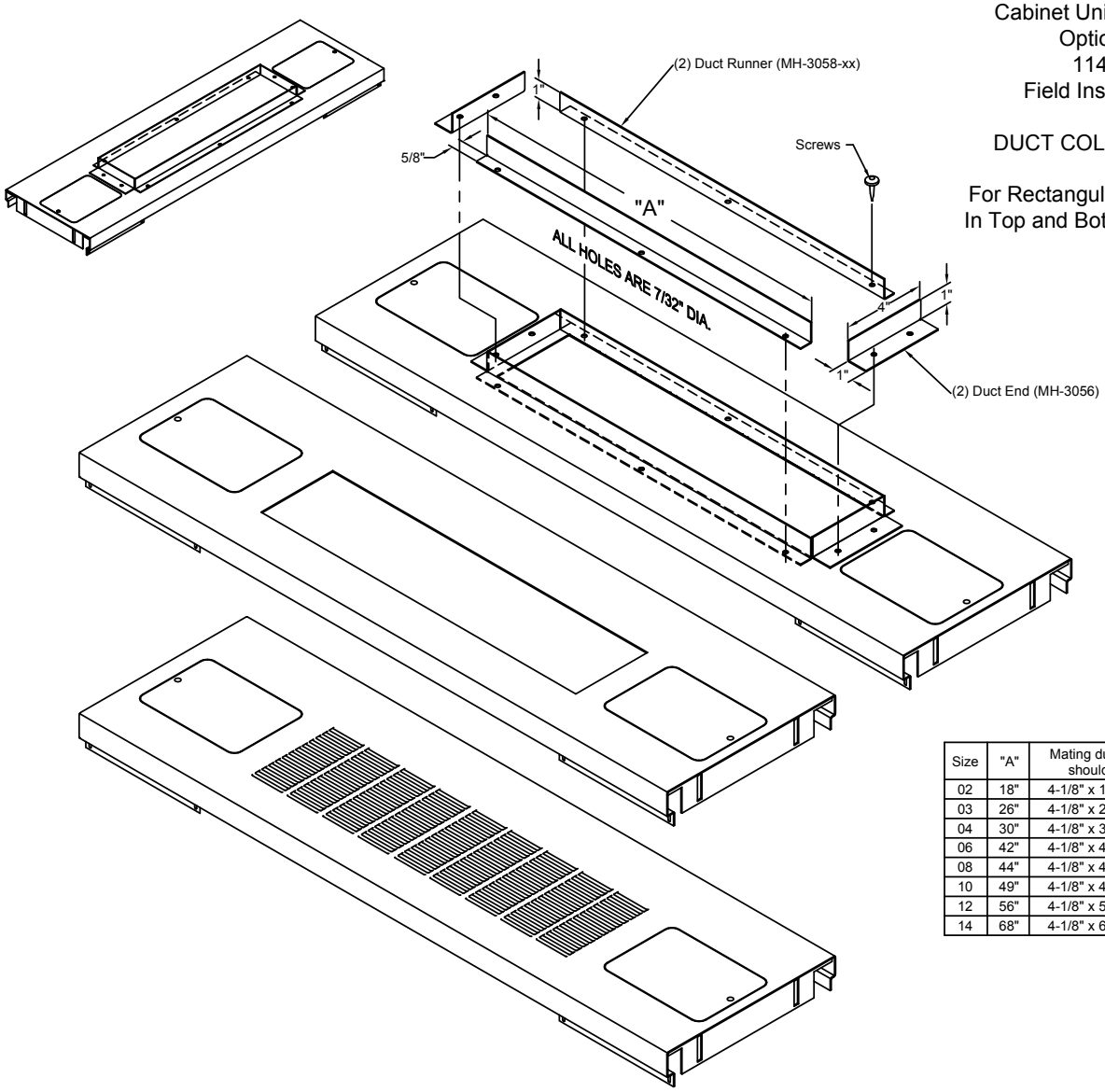

Size	"A"	Mating duct I.D. should be
02	18"	4-1/8" x 18-1/8"
03	26"	4-1/8" x 26-1/8"
04	30"	4-1/8" x 30-1/8"
06	42"	4-1/8" x 42-1/8"
08	44"	4-1/8" x 44-1/8"
10	49"	4-1/8" x 49-1/8"
12	56"	4-1/8" x 56-1/8"
14	68"	4-1/8" x 68-1/8"

It is recommended that the louver area is cut out prior to duct collar installation.

Duct collars are intended to be used with louvers cut away as shown.

To install:
Unpack cabinet unit heater. Place unit upright, align duct end/runners in place, drill and secure.

Kit contents		
Unit Size	Runner (2 each)	End (2 each)
02	MH-3058.02	MH-3056
03	MH-3058.03	MH-3056
04	MH-3058.04	MH-3056
06	MH-3058.06	MH-3056
08	MH-3058.08	MH-3056
10	MH-3058.10	MH-3056
12	MH-3058.12	MH-3056
14	MH-3058.14	MH-3056

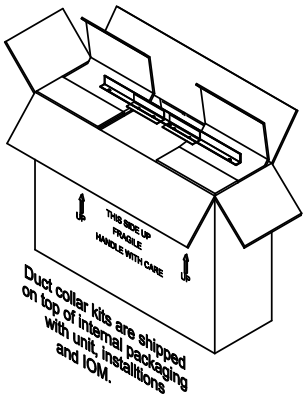

Note:
Duct collar kits are standard on models C-1150, RC-1190 and RC-1210.

CAT00189C.dwg

Cabinet Unit Heater
Option
116
Field Installed

LEVELING LEGS
FOR
FLOOR MOUNTED UNITS

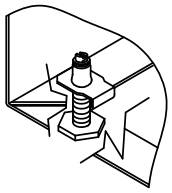

Insert and adjust to suit leveling conditions

View shown with pedestal removed from unit

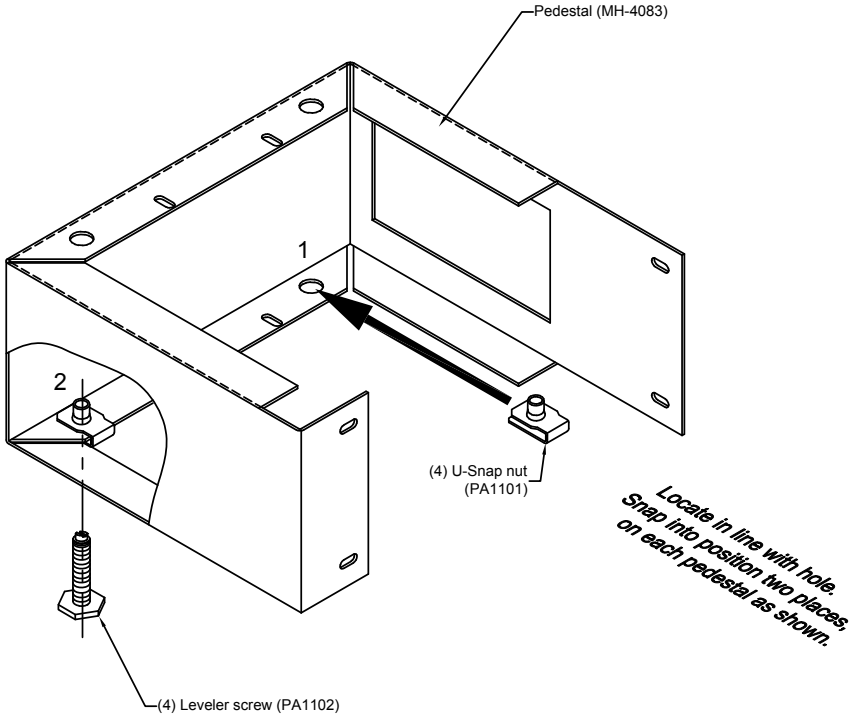

To install:
Unpack cabinet unit heater. Lay unit flat on its back, and follow the above instructions.

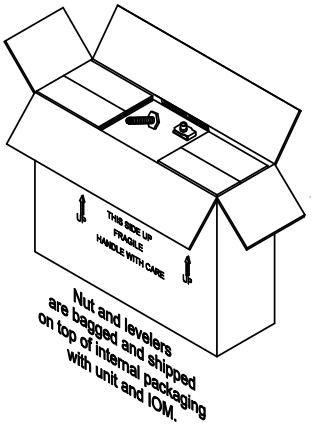

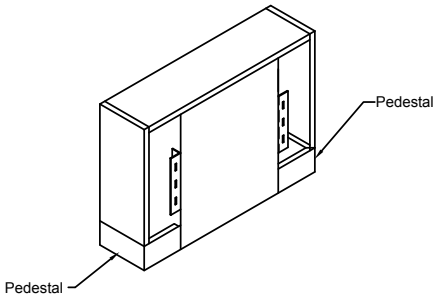

CAT00190D.dwg

Cabinet Unit Heater
Option
118
Field Installed

25% MANUAL OUTSIDE
AIR DAMPER

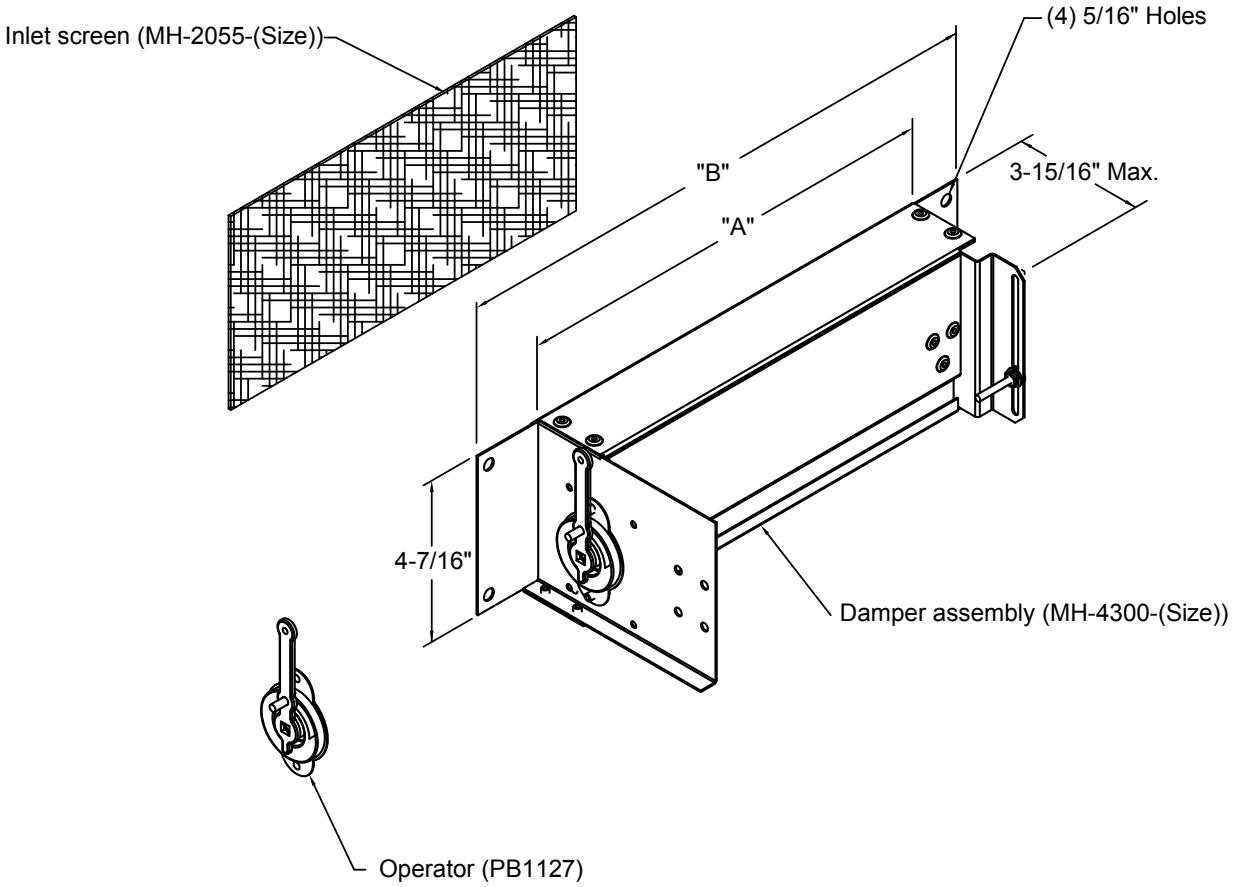

25% manual outside air damper - outside air intake can be adjusted from 0 to 25%.
Control is by manual quadrant. For use on floor units only.

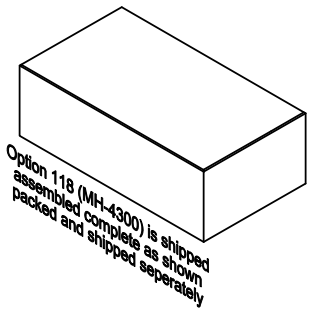

Option 118			
Size	Part Number	"A"	"B"
02	MH-4300-01	8-3/16"	11-7/16"
03	MH-4300-01	8-3/16"	11-7/16"
04	MH-4300-01	8-3/16"	11-7/16"
06	MH-4300-02	12-11/16"	15-15/16"
08	MH-4300-02	12-11/16"	15-15/16"
10	MH-4300-02	12-11/16"	15-15/16"
12	MH-4300-03	18-11/16"	21-15/16"
14	MH-4300-03	18-11/16"	21-15/16"

CAT00191C.dwg

Cabinet Unit Heater
Option
119
Field Installed

25% MOTORIZED OUTSIDE
AIR DAMPER

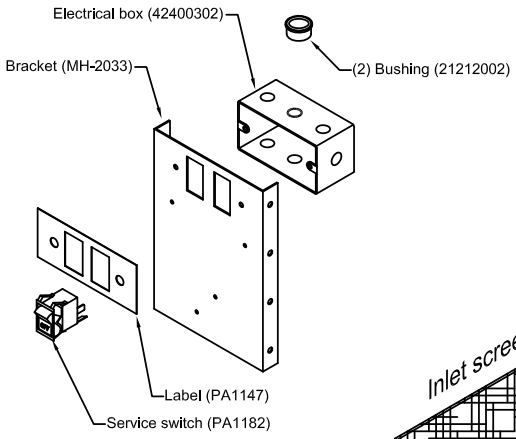

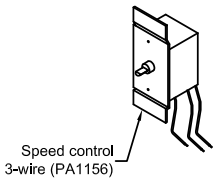

Option 119			
Size	Part Number	"A"	"B"
02	MH-4301-01	8-3/16"	11-7/16"
03	MH-4301-01	8-3/16"	11-7/16"
04	MH-4301-01	8-3/16"	11-7/16"
06	MH-4301-02	12-11/16"	15-15/16"
08	MH-4301-02	12-11/16"	15-15/16"
10	MH-4301-02	12-11/16"	15-15/16"
12	MH-4301-03	18-11/16"	21-15/16"
14	MH-4301-03	18-11/16"	21-15/16"

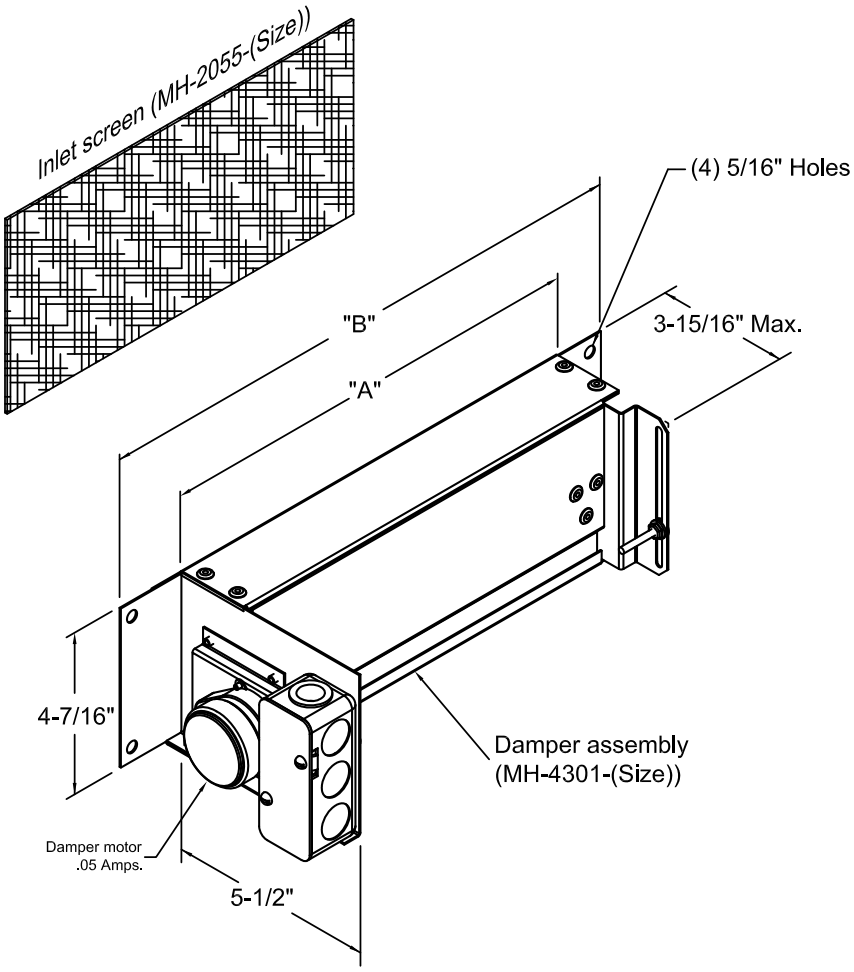

25% motorized outside air damper kit for field installation. - opens outside air intake to 25% when motor(s) start. Closes when motor(s) stop. Service switch is provided to prevent damper operation when desired. For use on floor units only. See Option 17, available for field installation.

Please refer to wiring diagram below.

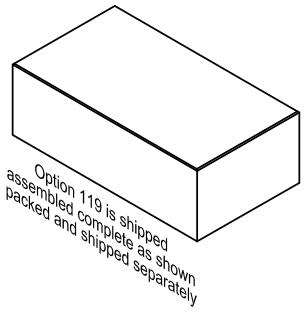

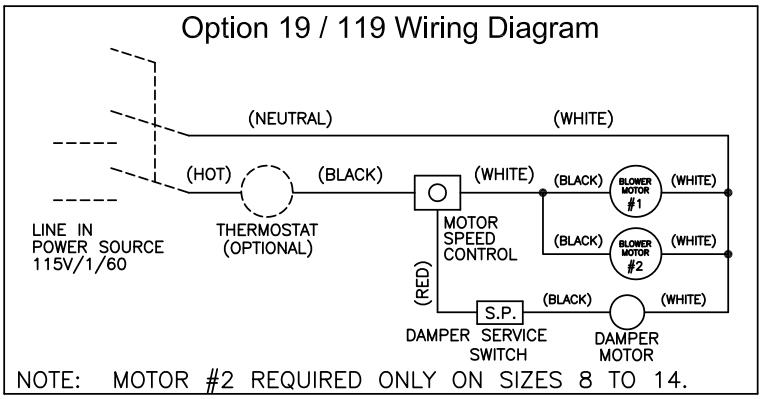

CAT-00192E.dwg

Cabinet Unit Heater
Option
125
Field Installed

AQUASTAT CONTROLLED
FAN, FROM RETURN WATER
STRAP-ON

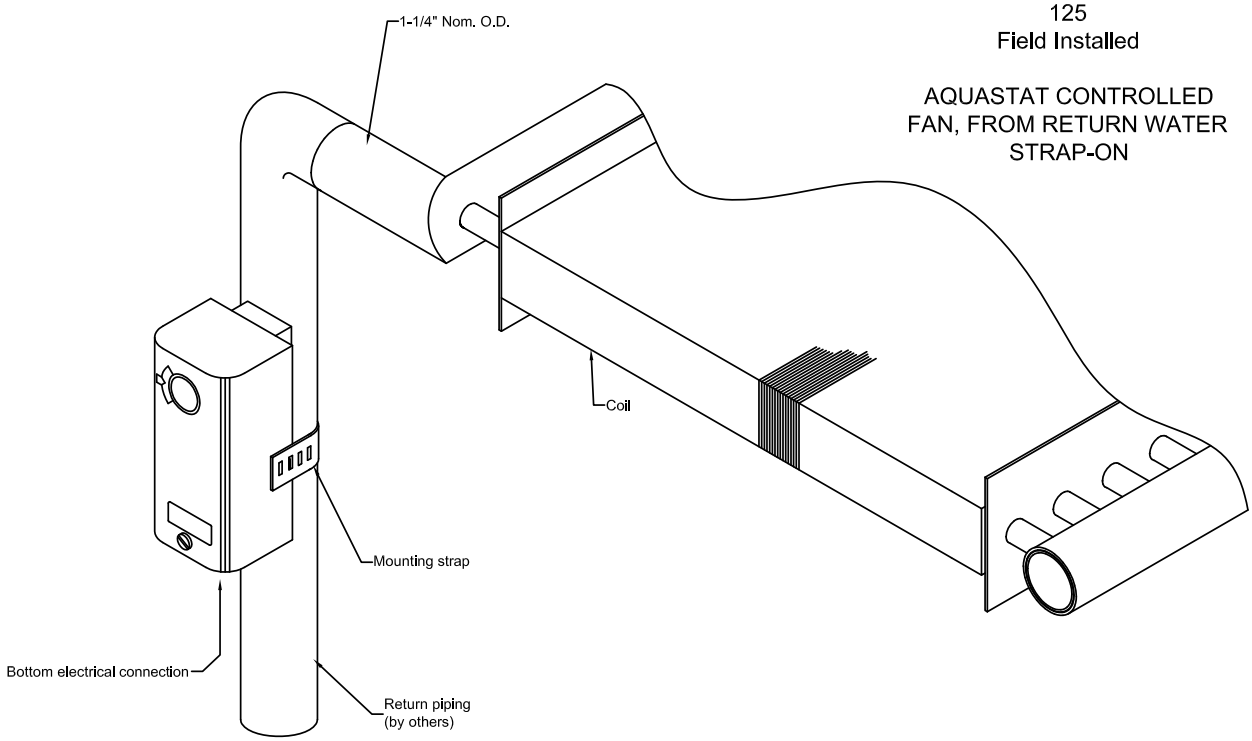

Approx. Size: 4-3/8"H x 2-1/8"W x 2-1/2"D

Temperature range: 100°F - 240°F

10 Amps @ 120 Volts
6 Amps @ 240 Volts

This option consists of a return stat. The coil return stat is a strap-on type control which is located on the return piping line of the coil. The return line on a hot water heating system is the top piping outlet. The supply line of a system is the bottom piping inlet.

When the heating system is turned on and hot water (or steam) is circulated, the coil return stat will not turn on the motor(s) until the temperature of the return line arrives at the temperature set on the coil return stat. Once that temperature has been reached, the coil return stat enables the motor(s) to start.

The coil return stat is to be wired in series with the speed control (standard on all units) and the motor(s). Please see wiring diagram.

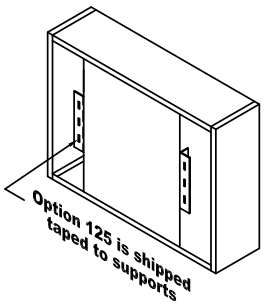

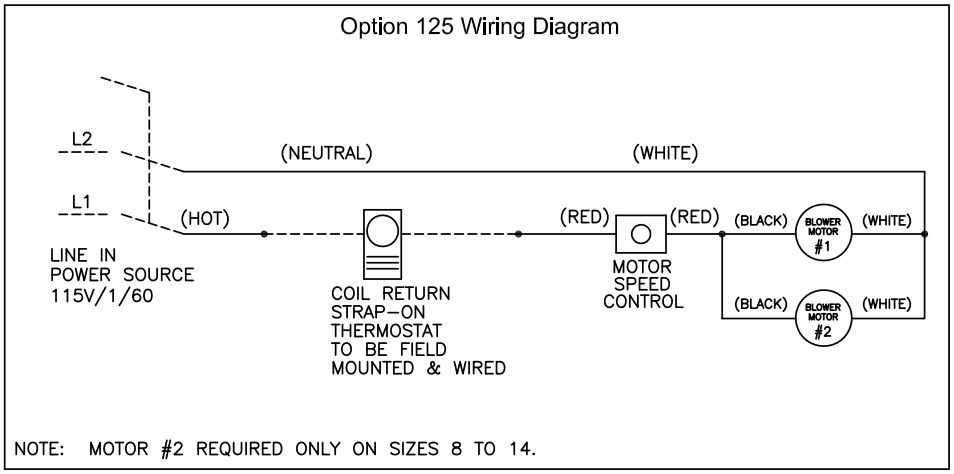

CAT00193B.dwg

Cabinet Unit Heater
Option
126A
Field Installed

WALL SEAL KIT
"FLOOR UNITS"

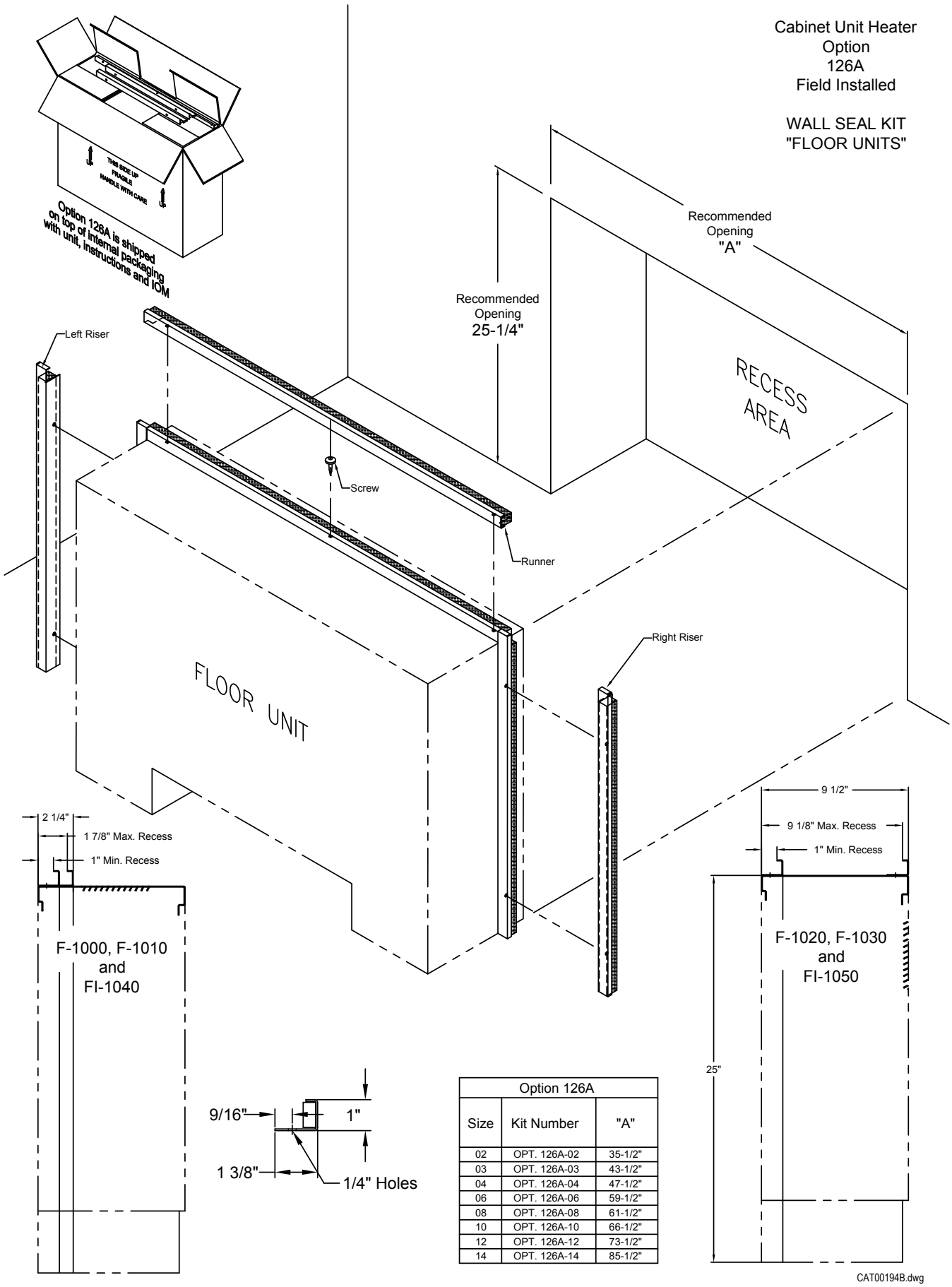

Option 126A		
Size	Kit Number	"A"
02	OPT. 126A-02	35-1/2"
03	OPT. 126A-03	43-1/2"
04	OPT. 126A-04	47-1/2"
06	OPT. 126A-06	59-1/2"
08	OPT. 126A-08	61-1/2"
10	OPT. 126A-10	66-1/2"
12	OPT. 126A-12	73-1/2"
14	OPT. 126A-14	85-1/2"

CAT00194B.dwg

Cabinet Unit Heater
Option
126B
Field Installed

WALL SEAL KIT
"WALL & CEILING UNITS"

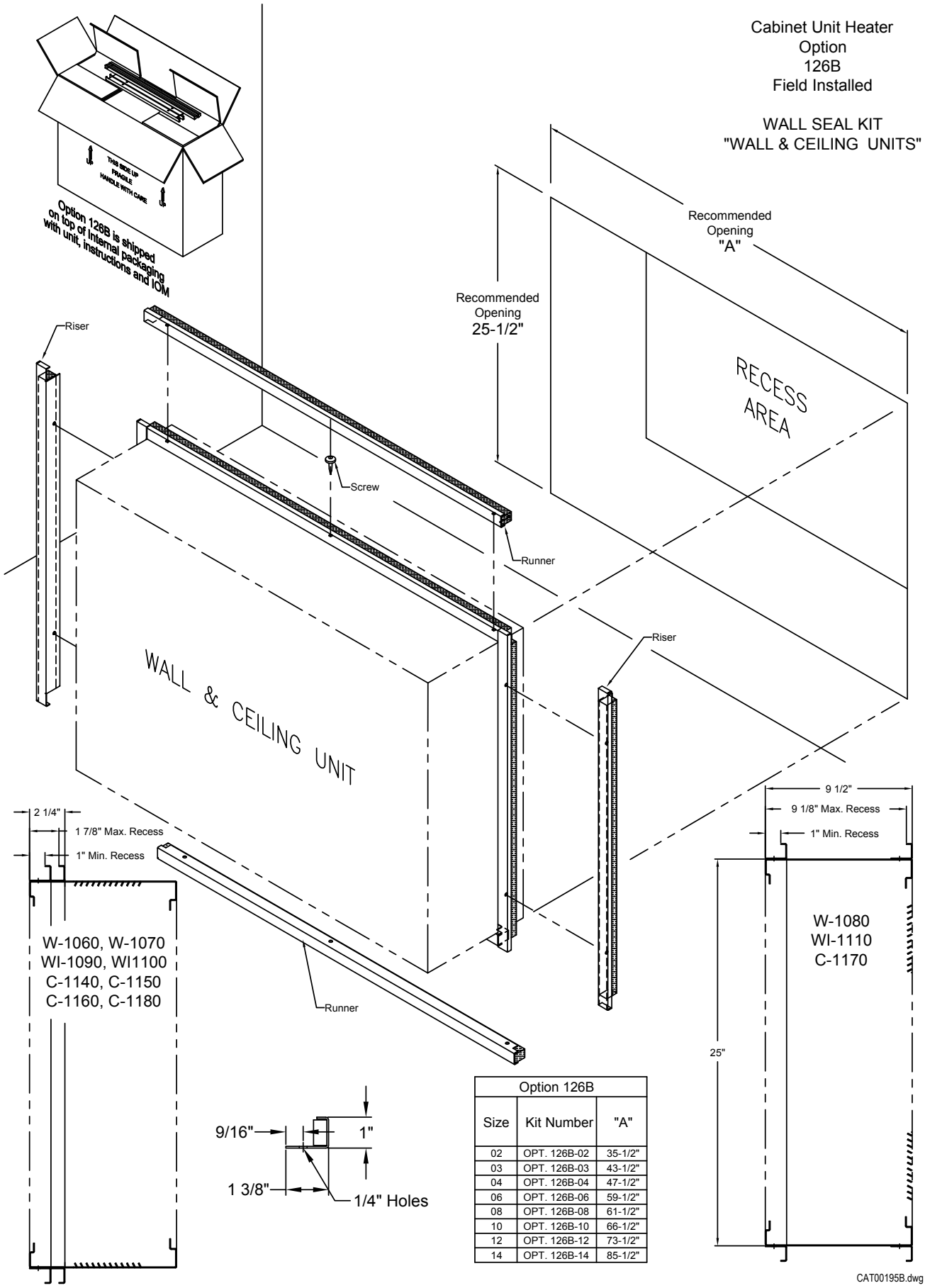

Option 126B		
Size	Kit Number	"A"
02	OPT. 126B-02	35-1/2"
03	OPT. 126B-03	43-1/2"
04	OPT. 126B-04	47-1/2"
06	OPT. 126B-06	59-1/2"
08	OPT. 126B-08	61-1/2"
10	OPT. 126B-10	66-1/2"
12	OPT. 126B-12	73-1/2"
14	OPT. 126B-14	85-1/2"

WALL SEAL INSTRUCTIONS

CABINET UNIT HEATERS

7/16" Projection by 1" Wide Wall Seal Kit

INSTALLATION INSTRUCTIONS

PREPARATION: The design of these cabinets and wall seal frames allows recessing of all models per the Wall Seal schedule (Fig. 1) shown below:

Fig. 1

MODEL	These Models may be Partially or Fully Recessed	These Models may be Partially Recessed only (2 1/4" Max.)
F	F-1020, F-l030	F-1000, F-1010
FI	FI-1050	FI-1040
W	W-1080	W-1060, W-1070
WI	WI-1110	WI-1090, WI-1100
C	C-1170	C-1140, C-1150 C-1160, C-1180

STEP 1: Measure depth unit is to be recessed (usually this is the distance from face of finished wall to back of recess). Add 7/16". Measure this distance from the back of the cabinet and mark the top and side of the cabinet. This will be the location of the exposed face of the wall seal.

STEP 2: Position the wall seal top section (and bottom section for wall and ceiling application) with mounting holes against cabinet (overlap edge 1/4" each end). Mark through the pre-punched holes. Using a short 9/64 or 5/32" drill, drill into the cabinet at those marks. DO NOT DRILL INTO THE COIL. Attach using 5/8" long sheet metal screws (furnished).

STEP 3: Position the wall seal side sections with mounting holes against the cabinet side with the face of section at line marked in Step 1. Slide section over top (and bottom if applicable) section and attached as in Step 2.

Cabinet Unit Heater
Option
127
Field Installed

LINE VOLTAGE
ROOM (WALL) THERMOSTAT

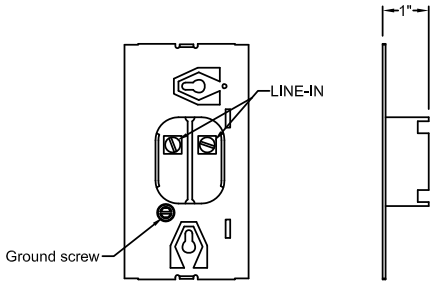

Back view
Projects 1" into wall/box

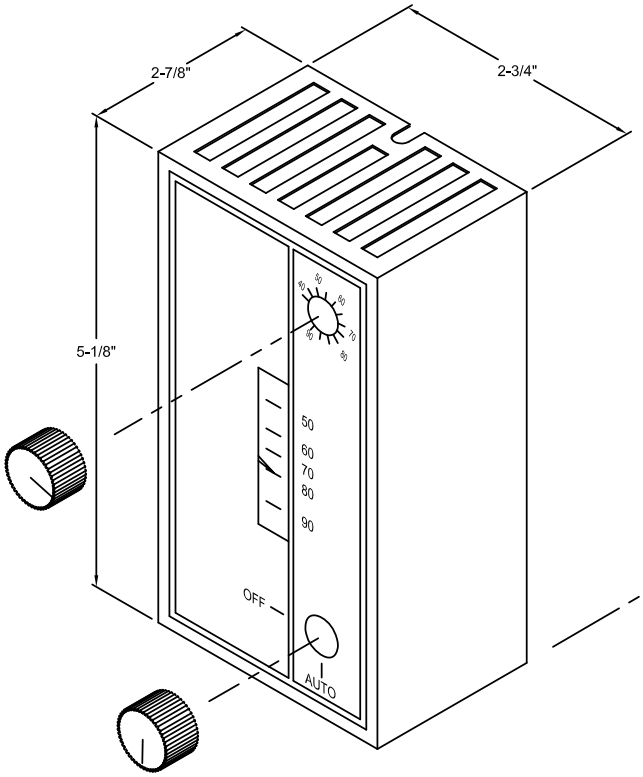

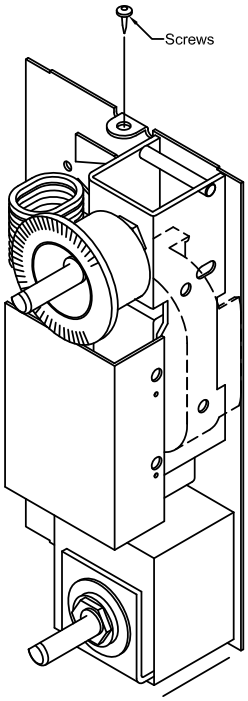

Line voltage room (wall) thermostat - Heating only with "OFF - AUTO" selector switch.
Temperature range 40°F - 90°F. Rated 6.0 Amps @ 120 VA.
T22AAA-1, S.P.S.T.

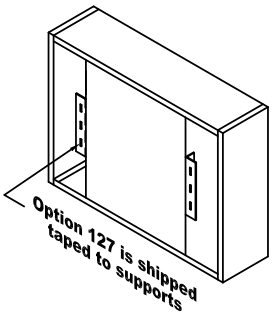

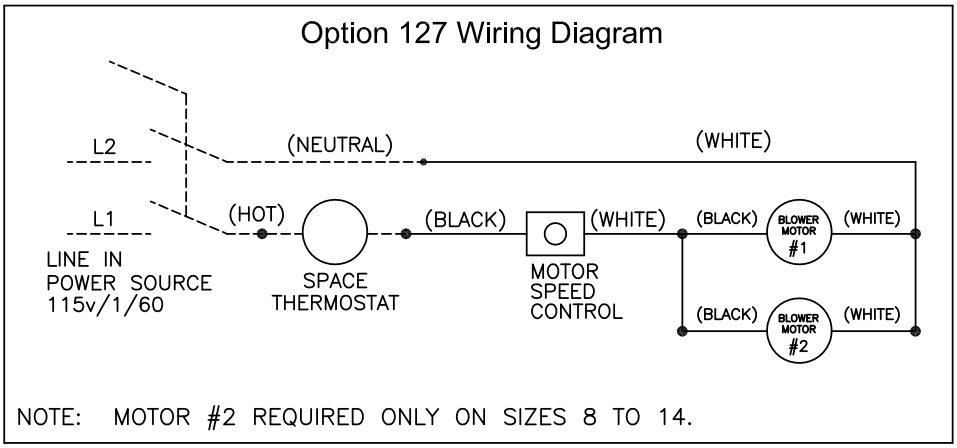

CAT00197B.dwg

Cabinet Unit Heater
Option
129
Field Installed

EXTRA FILTER

(Shipped Separately)

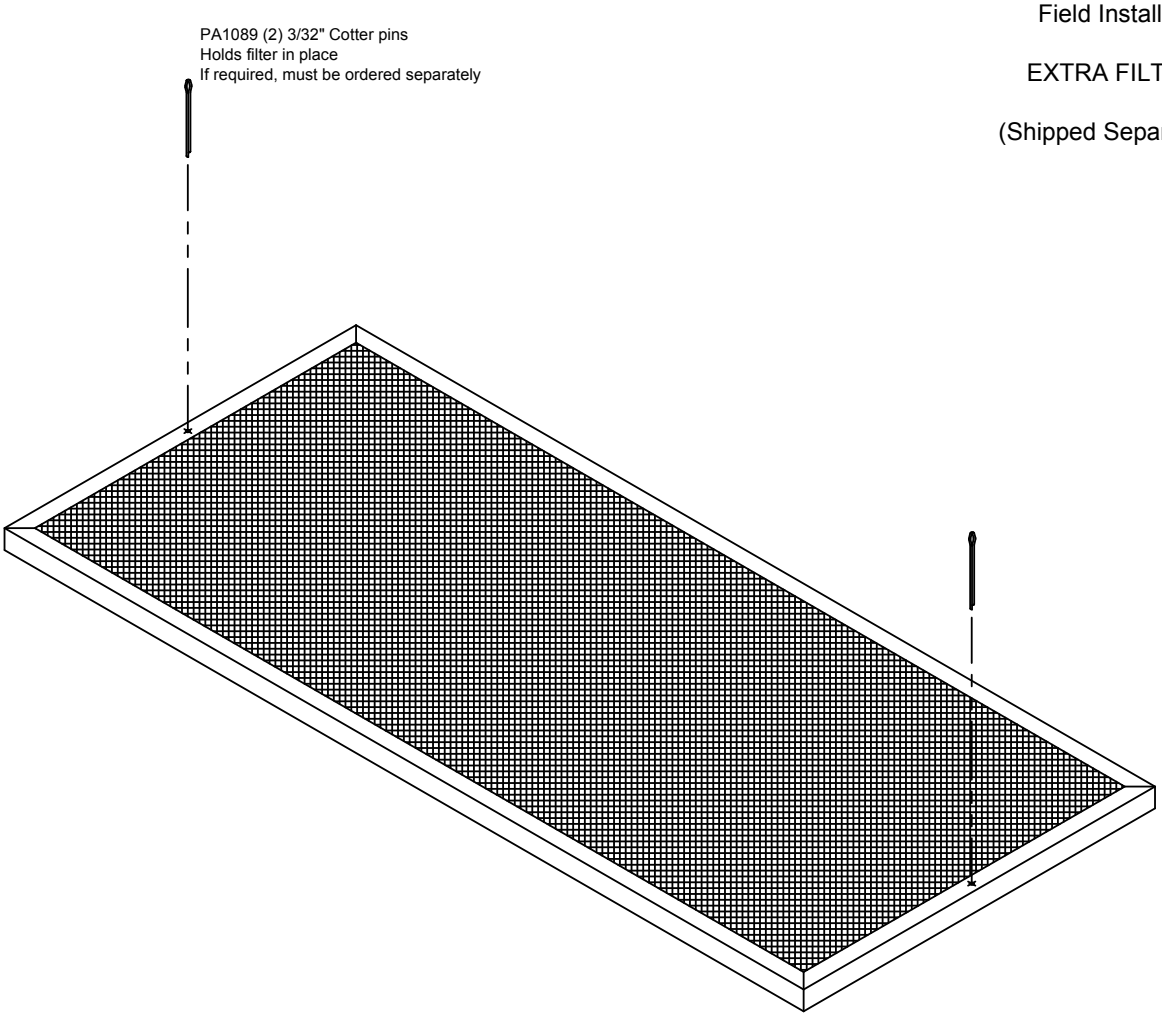

Permanent washable "EVK" type filter
Aluminum frame, expanded aluminum pad, UL CLASS 2
.06 SP @ 350 FPM

Standard Filters			
OPTION	SIZE	Part Number	Filter Dimensions
129	02	PC1297-02	15/32"H x 8-11/16"D x 19-3/4"L
129	03	PC1297-03	15/32"H x 8-11/16"D x 27-3/4"L
129	04	PC1297-04	15/32"H x 8-11/16"D x 31-3/4"L
129	06	PC1297-06	15/32"H x 8-11/16"D x 43-3/4"L
129	08	PC1297-08	15/32"H x 8-11/16"D x 45-3/4"L
129	10	PC1297-10	15/32"H x 8-11/16"D x 50-3/4"L
129	12	PC1297-12	15/32"H x 8-11/16"D x 57-3/4"L
129	14	PC1297-14	15/32"H x 8-11/16"D x 69-3/4"L

CAT00198A.dwg

Cabinet Unit Heater
Option
140
Field Installed

24VAC TRANSFORMER

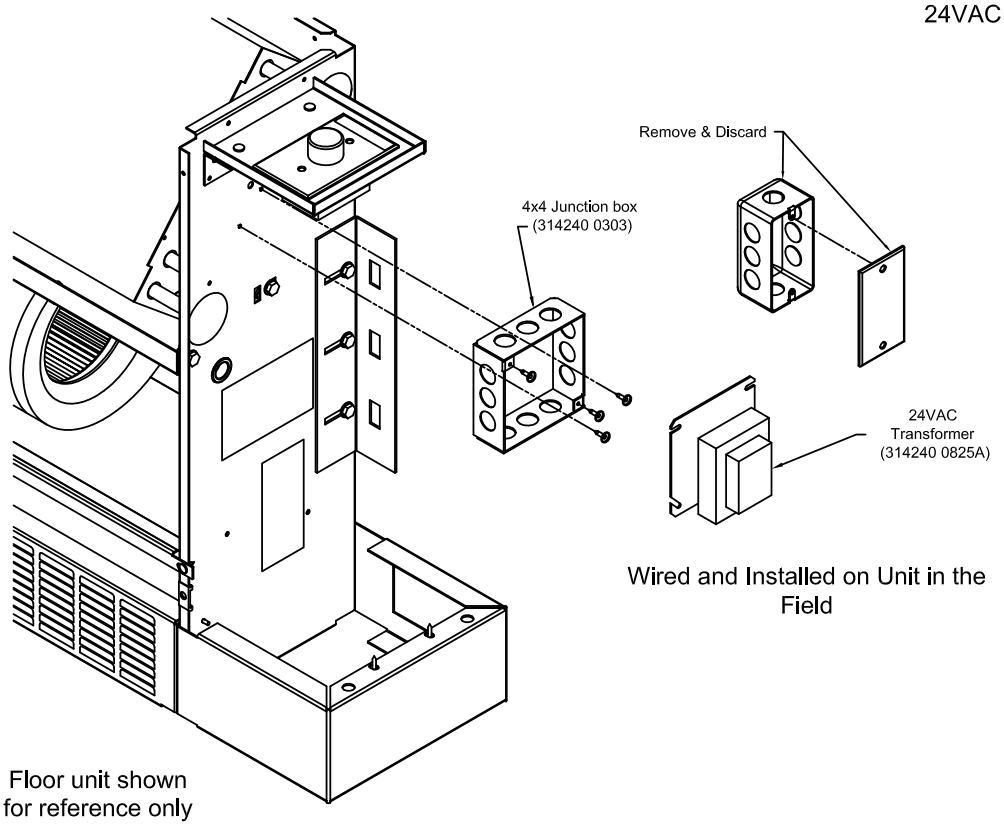

This option consists of a plate mounted 24VAC 40VA transformer and a 4x4 junction box. This replaces the standard 2x4 junction box and cover when field installed. The 120VAC primary and 24VAC secondary connections are housed in the junction box.

This can be used for powering 24VAC devices such as control boards, low voltage thermostats, relays, valves, etc. Transformer is rated for 40VA maximum load.

Please see wiring diagram below. Note: when used with a service switch, wire the transformer primary to the output of the service switch.

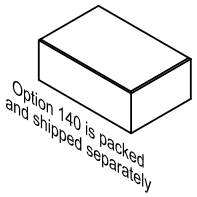

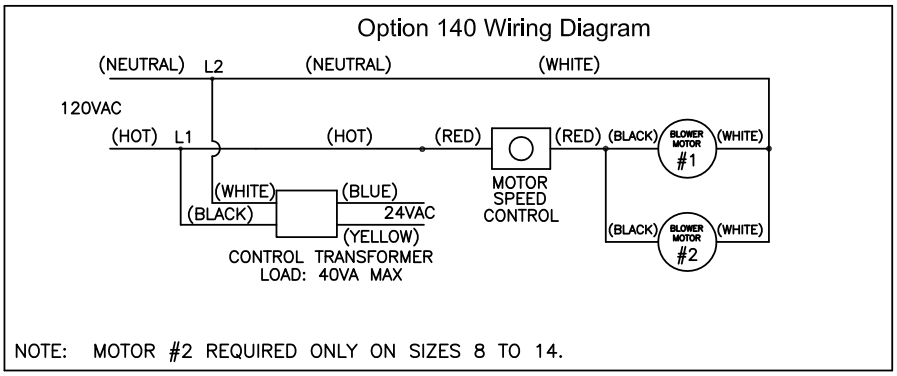

CAT80568B.dwg

STANDARD CABINET UNIT HEATER WIRING DIAGRAM 115 VOLT

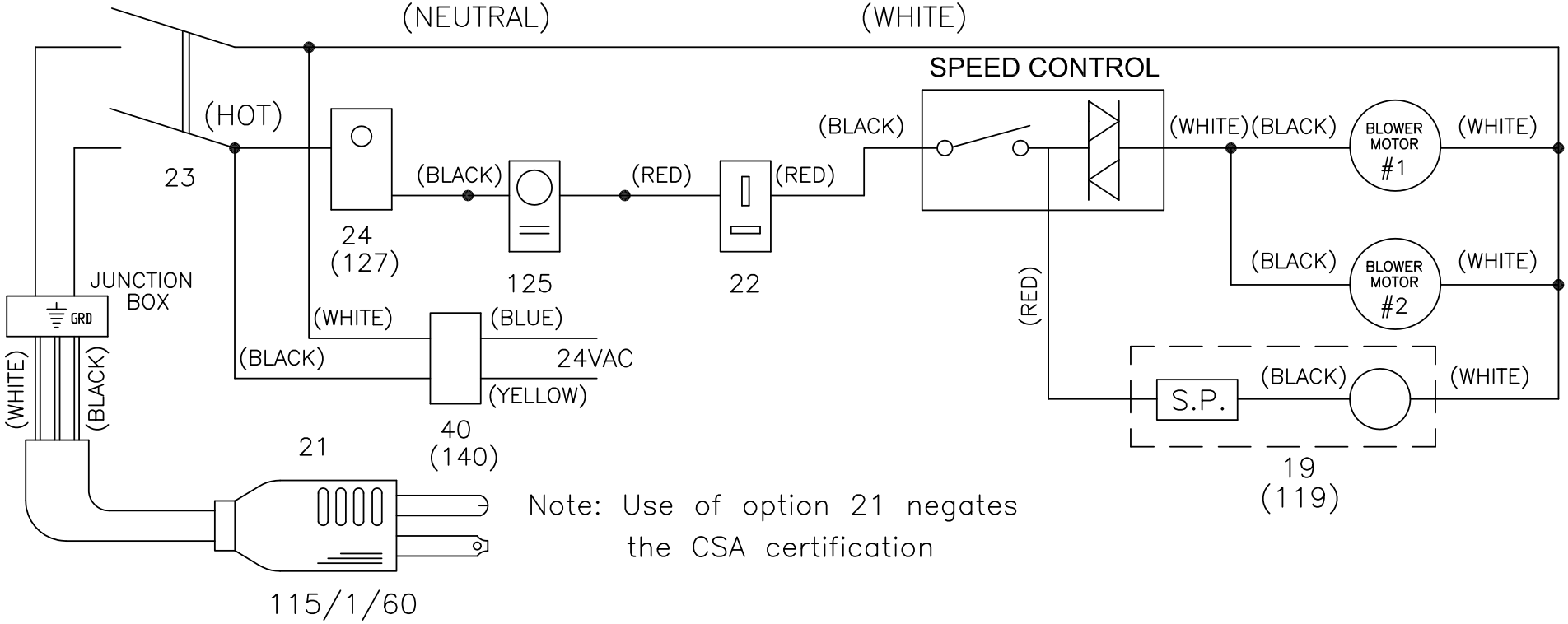

Note: Use of option 21 negates the CSA certification

OPTION	DESCRIPTION	PART NUMBER	CSA	UL
19/119	MOTORIZED DAMPER	PB1121,PA1182	Y	Y
21	POWER CORD	PA1130	N	N
22	MOTOR STARTER W/ HTR	PA1142	Y	Y
23	SERVICE SWITCH	PA1183	Y	Y
24	RETURN AIR T'STAT (°F)	PA1141	Y	Y
24C	RETURN AIR T'STAT (°C)	PA1698	Y	Y
40/140	24VAC TRANSFORMER	314240 0825A	Y	Y
125	AQUASTAT	PA1131	Y	Y
127	WALL T'STAT	PA1143	Y	Y
	SPEED CONTROL 2 WIRE	PA1031	Y	Y
19/119	SPEED CONTROL 3 WIRE	PA1156	Y	Y

} On all ceiling/recessed units the speed control is shipped packed with unit for wall mounting and wiring.

Options: 19,21,22,23,24,40,125,127

CAT00199D.dwg

MESTEK, INC.

© Copyright Mestek, Inc.