MULTIPLE BOILERS PRIMARY/SECONDARY CONSTANT TEMPERATURE REVERSE RETURN

260 North Elm Street - Westfield, MA 01089
413.568.9571 fax 413.568.9613

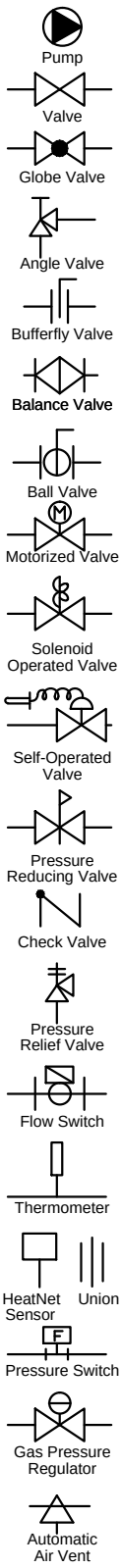

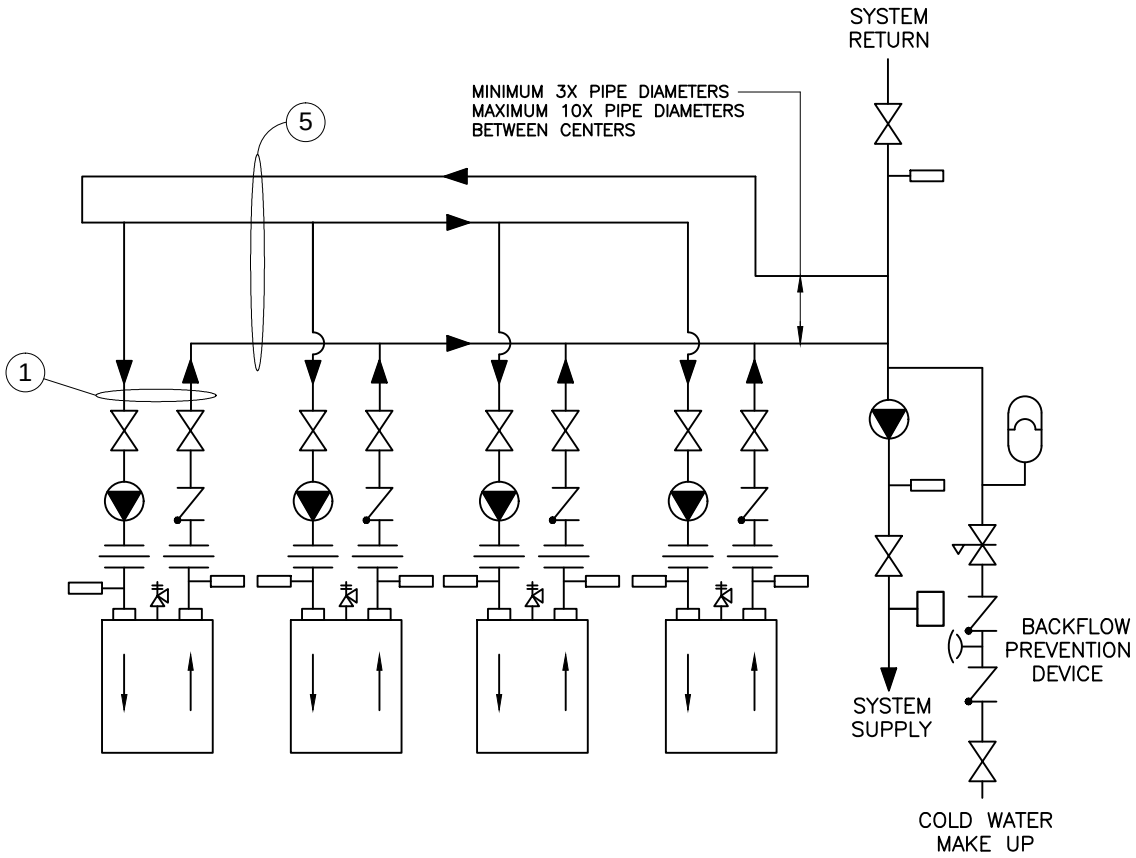

H-15 Rev 6

NOTES:

1. Boiler circuit piping must be sized large enough to handle maximum flow through unit.
2. Boiler pump sized to boiler design flow requirements.
3. All boilers furnished with factory mounted outlet water temperature gauge.
4. Boiler pump purging required. Use terminals supplied.
5. Secondary loop pipe diameter must be sized large enough to handle maximum flow through all units.
6. For HeatNet operation, a sensor is required and installed at a minimum of 12" from primary loop tee.

Notice: These drawings show suggested piping configuration and valving. Check with local codes and ordinances for specific requirements.

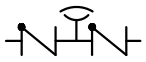
Backflow-Prevention Device

EXPANSION TANK