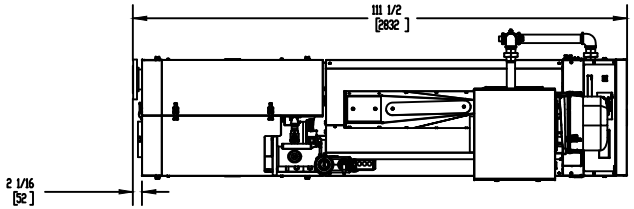

TOP VIEW

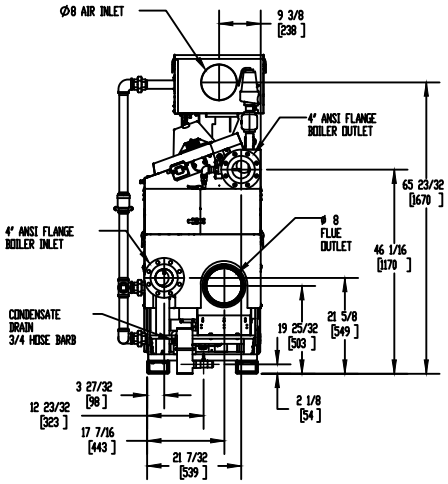

REAR VIEW

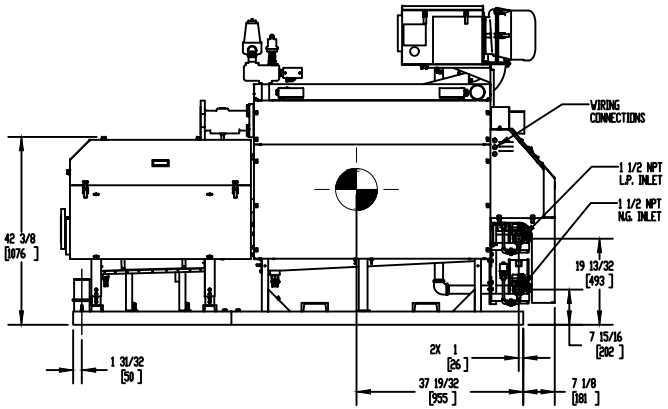

SIDE VIEW

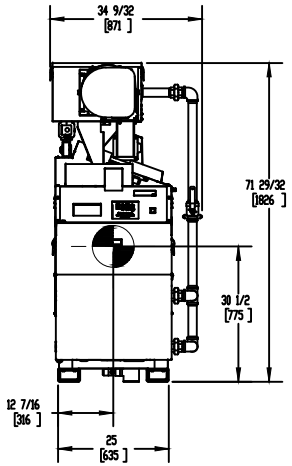

FRONT VIEW

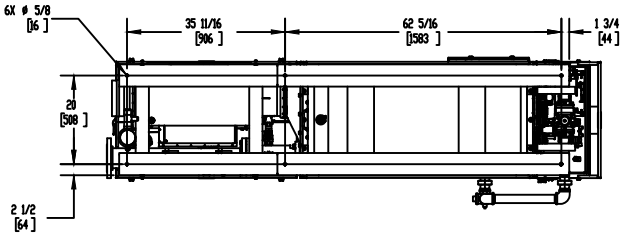

BOTTOM VIEW

NOTES:

1. -⊕- SYMBOL INDICATES CENTER OF GRAVITY.
2. DIMENSIONS ARE NOMINAL AND SUBJECT TO MANUFACTURING VARIATION AND SHOULD NOT BE USED FOR "ROUGHING IN".
3. ALL DIMENSIONS ARE INCHES [mm].