AIRLINE™ LOUVERS

AS1S45H

STANDARD MATERIALS AND CONSTRUCTION

FRAME: .060" thick (nominal) extruded aluminum, 6063-T52/T6 alloy.
BLADE: .125" thick (nominal) extruded aluminum, 6063-T52/T6 alloy.
SCREEN: (When indicated.)
18/16 mesh, .011" dia. aluminum wire, insect screen.
FINISH: Mill

OPTIONS

Finish - Baked Enamel, Kynar, Anodize
Screens - ½" sq. mesh, 19 GA galvanized steel, .041",
-or- ½" flattened aluminum, .051",
-or- ¼" sq. mesh, 18 GA galvanized steel, .047",
Plus others.

NOTES

1. Unless otherwise specified, ⅛" deductions will be made to the opening size given.
2. Approximate shipping weight is 3.0 lbs./sq.ft.

LOUVER SIZES

Min Panel	Max Single Panel
6"W x 6"H	24"W x 24"H

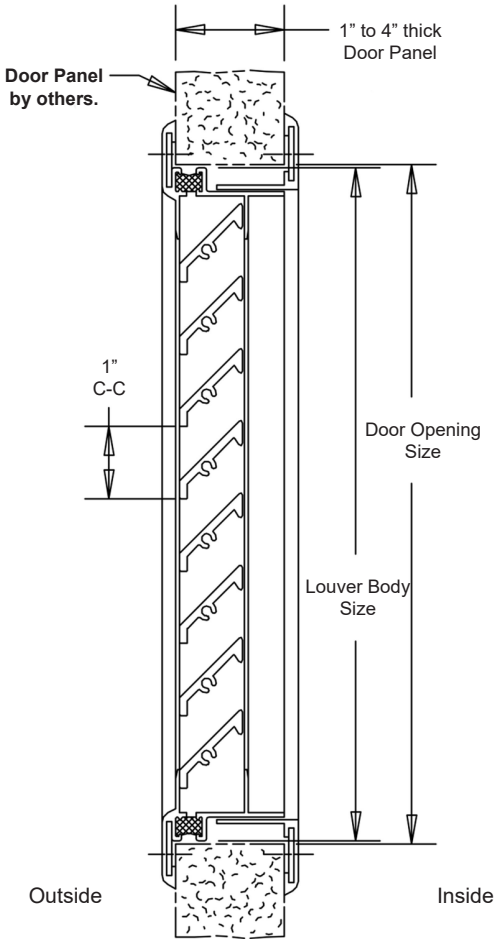

Installation Fastener supplied and installed by others.

Not to scale.

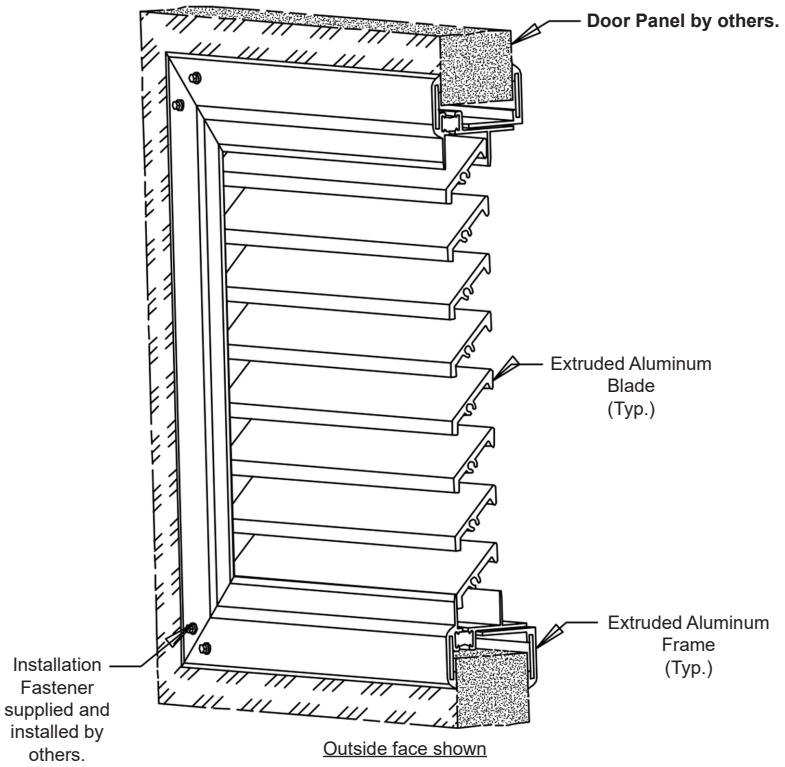

Outside face shown

Not to scale.

In the interest of product development, Airline Louvers reserves the right to make changes without notice.

Item #	Qty	Width	Height	Width	Height	Mullion	Type	Location		
		Opening Size		Louver Size			Screens			Union Made

Arch. / Eng. :		EDR:		ECN:		Job:
Contractor:						
Project:		Date:		DWN:		DWG:

1020 Prince Frederick Blvd. Suite 305 • Prince Frederick, MD 20687 • Phone: (570) 420-7079 • Fax: (570) 420-7078