AIRLINE™ LOUVERS

AA6S90HM

STANDARD MATERIALS AND CONSTRUCTION

FRAME: .081" thk. (nominal) extruded aluminum, 6063-T52/T6 alloy.
BLADE: .081" thk. (nominal) extruded aluminum, 6063-T52/T6 alloy. Blades are approximately 4½" on centers.
LOUVER FACE: Full width sill with drain head and non-drain blades contained within drain jambs.
SHAFT: .50" dia aluminum "Pin-Lock" rod.
BEARINGS: "Double Sealed" bearing, with inner bearing riding inside a polycarbonate outer bearing, designed so that Celcon bearing material will not cause metal to metal friction.
LINKAGE: Extruded aluminum, concealed in the channel out of the airstream. Pivots, which rotate in Celcon bearings, are .50" dia. plated and machined steel. The pivot is locked to the 5⁄16" dia. aluminum linkage rod by a ¼ - 20 set screw with epoxy locking patch.
SEALS: Extruded silicone rubber seals at blade edge. Polyurethane at jambs.
SCREEN: (When indicated, in a removable frame) ½" flattened aluminum, .051" thk.,
-or- ½" sq. mesh intermediate double crimped aluminum wire, .063" dia.,
-or- 18⁄16 aluminum mesh insect screen, .011" dia.
ACTUATOR: 120 VAC, spring return normally closed. 133 in-lbs. torque.
FINISH: Mill.

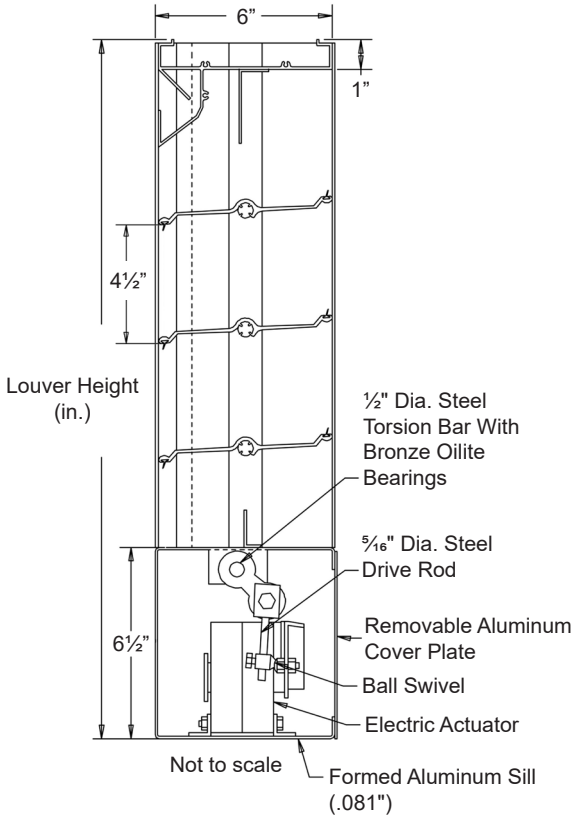

OPTIONS

Finishes - Enamels, Epoxies, etc.
Other screens also available.

NOTES

1. ½" nominal deduction will be made to the opening size given.
2. Approximate shipping weight is 5.0 lbs./sq.ft.

LOUVER SIZES

Min Panel	Max Single Panel
12"W x 19"H	48"W x 96"H

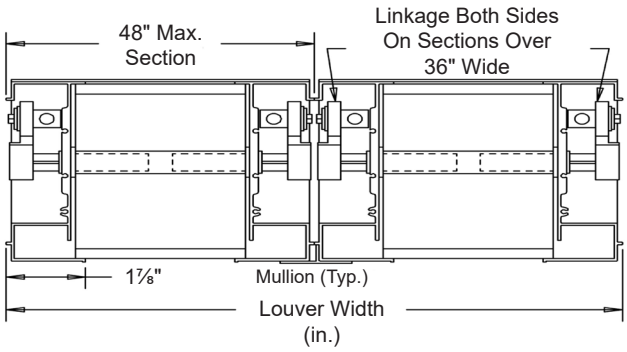

In the interest of product development, Airline Louvers reserves the right to make changes without notice.

Item #	Qty	Width	Height	Width	Height	Mullion	Type	Location		
		Opening Size		Louver Size			Screens			Union Made
Arch. / Eng. :						EDR:		ECN:		Job:
Contractor:										
Project:						Date:		DWN:		DWG:

1020 Prince Frederick Blvd. Suite 305 • Prince Frederick, MD 20687 • Phone: (570) 420-7079 • Fax: (570) 420-7078