MODEL A635AF

Extruded Aluminum Louver ▲ 6″ Deep ▲ 35° Drainable Blades ▲ Airfoil Adjustable Blades ▲ Combination

STANDARD MATERIALS AND CONSTRUCTION

FRAME: .081” thk. (nominal) extruded aluminum, 6063-T52/T6 alloy. Channel type.

BLADES: Stationary blades are made from .081” thk. (nominal) extruded aluminum 6063-T52/T6 alloy. Adjustable blades are made from .125” thk. (nominal) extruded aluminum 6063-T52/T6 alloy, in an Airfoil design. Blades are approximately 4½” on centers.

LOUVER FACE: Full width head and sill with blades and jambs contained within.

SHAFT: .50” dia. aluminum “Pin-Lock” rod.

LINKAGE: Extruded aluminum, concealed in the channel out of the airstream. The pivots, which rotate in Celcon bearings, are .50” dia. plated and machined steel. The pivot is locked to the 5⁄16” dia.aluminum linkage rod by a ¼ - 20 set screw with epoxy locking patch.

SEALS: Extruded silicone rubber seals at blade edge. Foam on bottom blade. Stainless steel at jambs.

SCREEN: (When indicated, in a removable frame) ½” flattened aluminum, .051” thk.,

-or- Insect screen 18⁄16 aluminum mesh, .011” dia.,

-or- ½” sq. mesh intermediate double crimped aluminum wire, .063” dia.

FINISH: Mill.

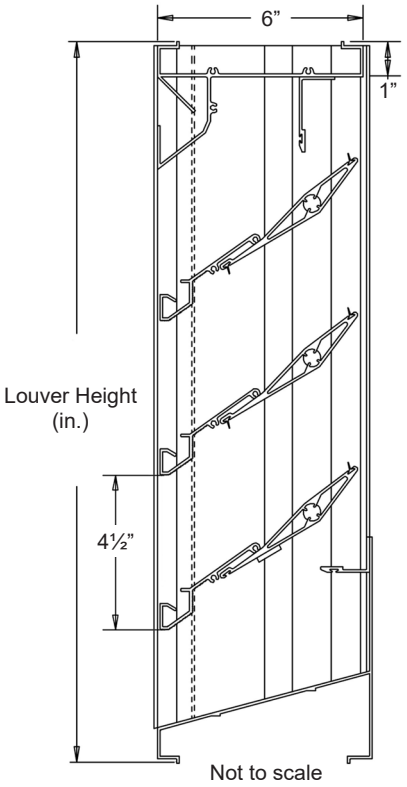

OPTIONS

Finishes - Enamels, Epoxies, etc.
Other screens available.
Actuators - Electric, Pneumatic, Manual, etc.

NOTES

1. ½” nominal deduction will be made to the opening size given.
2. Approximate shipping weight is 5.8 lbs./sq.ft.

LOUVER SIZES

Min Panel	Max Single Panel
12”W x 12”H	48”W x 96”H

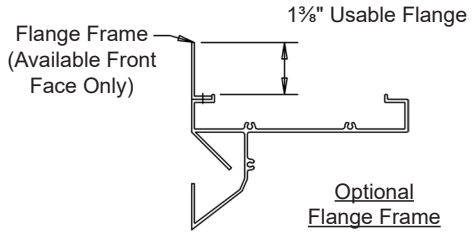

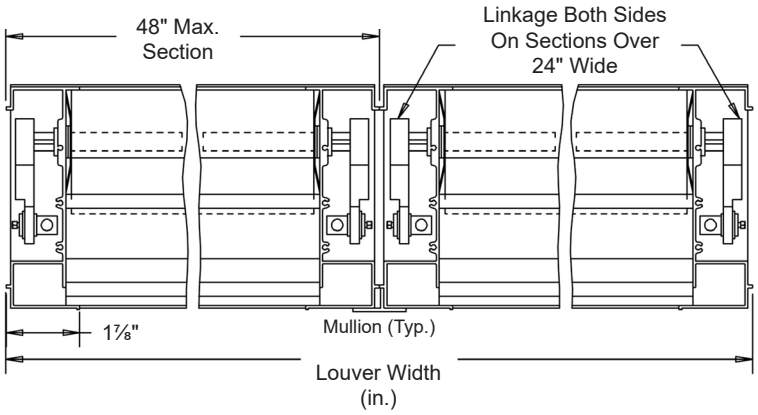

Item #	**Qty**	Width	Height	Width	Height	**Mullion**	Type	Location		
		Opening Size		**Louver Size**			**Screens**			**Union Made**
Arch. / Eng. :						**EDR:**		**ECN:**		**Job:**
Contractor:										
Project:						**Date:**		**DWN:**		**DWG:**

MODEL A635AF

Extruded Aluminum Louver ▲ 6″ Deep ▲ 35° Drainable Blades ▲ Airfoil Adjustable Blades ▲ Combination

PERFORMANCE DATA

Pressure Drop: .14 in. w.g. at 1026 fpm
Free Area: 8.24 sq.ft. = 52% for 48"W x 48"H sample tested in accordance with AMCA Standard 500-L.
Beginning Point of Water Penetration: 1029 fpm

Ratings do not include the effects of a screen.

Pressure Drop

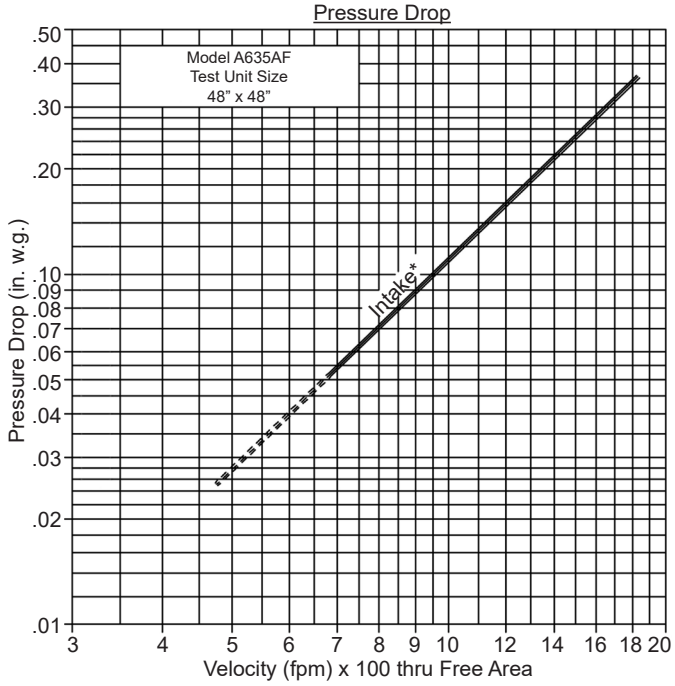

Water Penetration

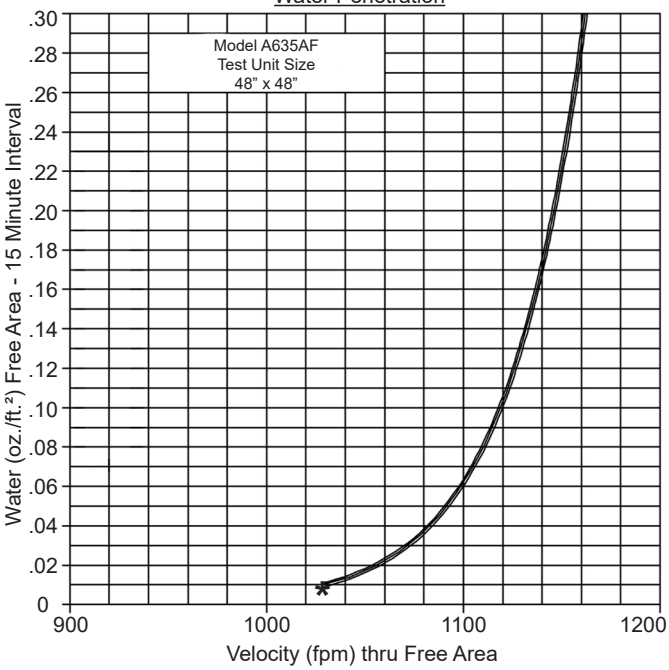

1029 (FPM) Beginning Point of Water Penetration.

*Intake air converted to standard air density.
Tested to AMCA Standard 500-L, Figure 5.5.

Free Area (sq.ft)

Height (in.)	Width (in.) 12"	18"	24"	30"	36"	42"	48"
12"	.14	.24	.34	.45	.55	.65	.76
24"	.64	1.12	1.60	2.08	2.55	3.03	3.51
36"	1.00	1.76	2.51	3.26	4.02	4.77	5.52
48"	1.50	2.62	3.74	4.87	5.99	7.11	8.24
60"	2.00	3.50	4.99	6.49	7.99	9.49	10.99
72"	2.36	4.14	5.91	7.68	9.45	11.23	13.00
84"	2.86	5.00	7.14	9.28	11.42	13.57	15.71
96"	3.36	5.87	8.39	10.91	13.43	15.94	18.46

Air Leakage with adjustable blade in closed position with a seating torque of 6.25 in.lb./sq.ft. of Louver Face Area. Leakage is based on a test of a 48" x 48" louver.

Air leakage (Louver Installation Position, Intake) is per AMCA Standard 500 Procedure Fig. 5.5.

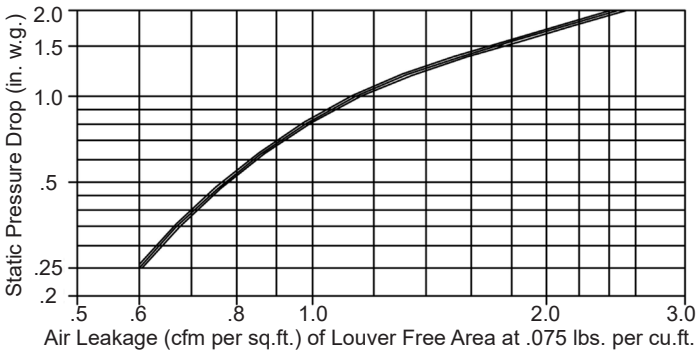

air balance
Dampers Louvers
UL Life Safety Products
Division of Mestek
Member of AMCA

airbalance.com

450 Riverside Dr • Wyalusing PA, 18853 • Phone 570-746-1888 • Fax 570-746-9286