MODEL AC454CM

Extruded Aluminum Louver ▲ 4″ Deep ▲ 35° Drainable Straight Blades ▲ Combination Adjustable ▲ Concealed Actuator

STANDARD MATERIALS AND CONSTRUCTION

FRAME: .081” thk. (nominal) extruded aluminum 6063-T52/T6 alloy.

BLADES: Stationary blades are made from .081” thk. (nominal) extruded aluminum 6063-T52/T6 alloy. Adjustable Blades are made from .125” thk. (nominal) extruded aluminum 6063-T52/T6 alloy. Blades approximately 3½” on centers.

LOUVER FACE: Full width sill with head and blades contained within jambs.

LINKAGE: Extruded aluminum, concealed in the channel out of the airstream. The pivots, which rotate in Celcon bearings, are .50” dia. plated and machined steel. The pivot is locked to the 5⁄16” dia. aluminum linkage rod by a ¼ - 20 set screw with epoxy locking patch.

AXLES: .50” dia. aluminum “Pin-Lock” extrusion.

SEALS: Extruded silicone rubber seals at blade edge. Foam on bottom blade. Stainless steel at jambs.

SCREEN: (When indicated, in a removable frame) ½” flattened aluminum, .051” thk.,
-or- Insect screen 18⁄16 aluminum mesh, .011” dia.,
-or- ½” sq. mesh intermediate double crimped aluminum wire, .063” dia.

FINISH: Mill

ACTUATOR: 120 VAC spring return normally closed. 133 in-lbs. torque.

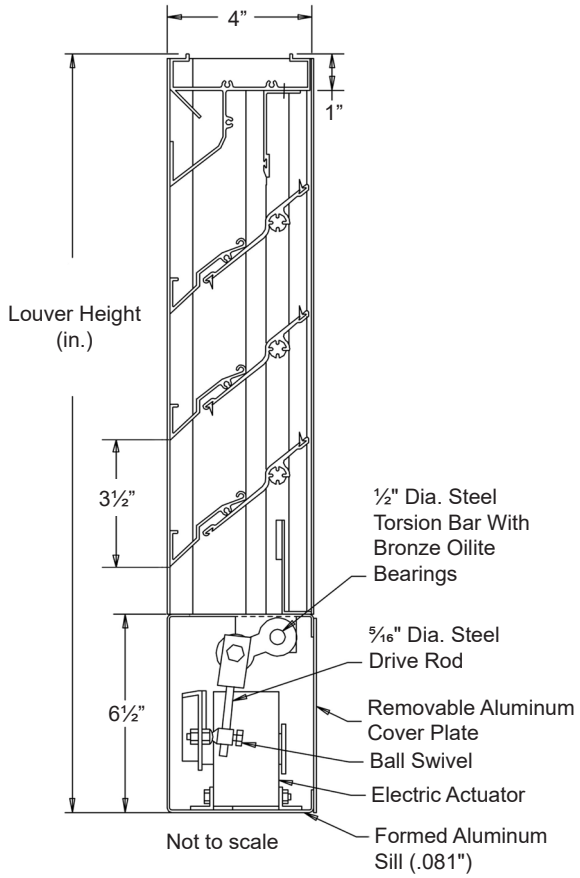

OPTIONS

Finishes - Enamels, Epoxies, etc.
Other screens available.
Actuators - Electric, Pneumatic, Manual, etc.

NOTES

1. ½” nominal deduction will be made to the opening size given.
2. Approximate shipping weight is 5.5 lbs./sq.ft.

LOUVER SIZES

Min Panel	Max Single Panel
12”W x 16”H	48”W x 96”H

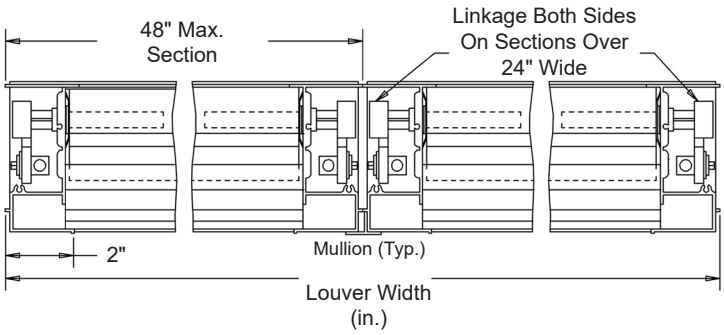

Item #	**Qty**	Width	Height	Width	Height	**Mullion**	Type	Location		
		Opening Size		**Louver Size**			**Screens**			**Union Made**
Arch. / Eng. :						**EDR:**		**ECN:**		**Job:**
Contractor:										
Project:						**Date:**		**DWN:**		**DWG:**